Whole Number 276, ISSN 0429-8284

FUJI ELECTRIC REVIEW

2022
Vol.68 No. 1

Power Supply Systems Contributing to Stable Power Supply and Energy Saving

Fuji Electric

Innovating Energy Technology

FUJI ELECTRIC
REVIEW

2022
Vol.68 No. 1

Power Supply Systems Contributing to Stable Power Supply and Energy Saving

Changes in the energy supply and demand environment due to the expanded use of renewable energy and advancements in social infrastructure and industrial systems through digital transformation (DX) have further increased the need for a stable supply of power and reliable operation of equipment at factories and other facilities. There are also growing needs for products to be eco-friendly and compact according to the internationally strengthened efforts to conserve the environment.

This special issue will introduce the base technologies for Fuji Electric's competitive components (devices) to help achieve stable equipment operation, eco-friendliness (energy saving and environmental impact reduction) and product downsizing.

The archives from the first issue, including articles in this issue, are available from the URLs below.

FUJI ELECTRIC REVIEW (English)
https://www.fujielectric.com/company/tech/contents3.html

FUJI ELECTRIC JOURNAL (Japanese)
https://www.fujielectric.co.jp/about/company/contents_02_03.html
FUJI ELECTRIC JOURNAL (Chinese)
http://www.fujielectric.com.cn/jtkw.html

Cover Photo:
(1) "UPS7500WX" high-capacity uninterruptible power system
(2) Globally compatible 145-kV GIS
(3) Transformer rectifier for aluminum smelting equipment

FUJI ELECTRIC REVIEW vol.68 no.1 2022
date of issue: July 30, 2022

editor-in-chief and publisher **NAKAYAMA, Kazuya**
Corporate R&D Headquarters
Fuji Electric Co., Ltd.
Gate City Ohsaki, East Tower,
11-2, Osaki 1-chome, Shinagawa-ku,
Tokyo 141-0032, Japan

editorial office Fuji Electric Journal Editorial Office
c/o Fuji Office & Life Service Co., Ltd.
1, Fujimachi, Hino-shi, Tokyo 191-8502,
Japan

The original Japanese version of this journal is "FUJI ELECTRIC JOURNAL" vol.95 no.1

Contents

Power Supply Systems Contributing to Stable Power Supply and Energy Saving

[Preface] Transition and Challenge of Stable Electric Power Supply 2
MITANI, Yasunori

Power Supply Systems Contributing to Stable Power Supply and Energy Saving: Current Status and Future Outlook 4
KAWANO, Masashi MATSUMOTO, Yasushi

Power Supply Systems Contributing to Stable Power Supply to Data Centers

High-Capacity Power Supply System That Contributes to Stable Power Supply for Data Centers 9
HAMADA, Ippei

Power System Construction Technology with Improved Redundancy and Maintainability 14
YASUMOTO, Koji NEMOTO, Kenji KITADANI, Yuji

Static Transfer System Cabinet for Data Centers That Contributes to Stable Power Supply 21
MURATSU, Hiroki WAKABAYASHI, Fumiya TOKUDA, Tsuyoshi

Rectangular Large-Capacity 5-Leg Type MOLTRA to Meet the Needs of Energy Saving and Downsizing 27
NAGATSUYU, Tomohiro MIYATA, Tomokazu

Power Supply Systems Contributing to Stable Operation of Facilities

Electric Power Management System Contributing to Safe and Stable Railway Transportation 32
UEKUSA, Hideaki YAMACHI, Toshifumi SHIRAKURA, Yoshizumi

Industrial-Use Power Supplies Contributing to Stable Operation of Material Manufacturing Equipment 39
WATABE, Kohei OKAZAKI, Yohei ASADA, Masato

Medium-Capacity Uninterruptible Power Systems with Improved Replaceability and Stable Operation 45
KAWASAKI, Daisuke TSUKUTA, Motohiro TSUTSUI, Shigeo

Palm Fatty Acid Ester Filled Transformer That Contributes to Reducing Environmental Load 50
HIKOSAKA, Tomoyuki CHIBA, Koichiro

New Products

Compact Multi-Purpose Vending Machine 56

Preface

Transition and Challenge of Stable Electric Power Supply

MITANI, Yasunori*

Approximately 140 years have passed since the king of inventors Thomas Edison launched its electric power business, and during that time, after the DC and AC debate with Nicola Tesla [Westinghouse Electric & Manufacturing Company (Company name at that time)], the Alternating Current won over the technology of converting to high voltages for long-distance transport, and the present large-scale AC power transport networks have been established. On the other hand, advances in power electronics technology have made it possible to handle various frequencies freely, including direct current, and direct current technology has penetrated into AC-based power systems. In particular, natural energy systems such as solar and wind energy generation are power generation systems that are not originally related to commercial-frequency 50 Hz or 60 Hz, and it can be said that the value of DC power transmission is increasing in this respect as well. Direct current transmission interconnection is also expected to strengthen the interconnected transmission network for nationwide natural energy interchange.

The power transportation network has become huge by strengthening the interconnection until now, and efficiency improvement and reliability upgrading have been attempted. At the same time, after experienced several large-scale power outage caused by spread of an accident, each time the power supply measures have been strengthened and related technologies have become more sophisticated. On the other hand, with the emergence of global environmental problems, energy conservation and low environmental load have become important keywords. With the increase of natural energy power generation and power electronics equipment in the electric power system, new problems are emerging. For example, as the amount of solar power generation increases during clear daytime in the AC system, the proportion of thermal power generation, which has been playing a role of keeping the frequency constant by balancing the demand and supply, decreases, resulting in a sharp drop in the supply-demand balancing capacity from both sides of increasing variation power sources and decreasing demand-supply balancing power sources. In addition, the stability of the synchronous machine is becoming weaker when disturbances occur due to the drop of the synchronizing power, which is the function of self-stability originally possessed by the synchronous machine, and the lowering of the inertial power possessed by the rotating equipment. The troublesome point of this problem is that it is difficult to see the drop of stability under normal operation, which may cause an unexpectedly large effect once a large disturbance occurs. Though the blackout in Hokkaido is still fresh in our minds, the drop of synchronization and inertia power must also become an important issue that cannot be overlooked in future. In addition, the so-called duck curve problem, in which thermal power generation must be launched abruptly for supply-demand balancing with the rapid decline in solar power generation from the evening, suggests that an increase in natural energy does not lead to a simple reduction in environmental impact.

While uncertainty is increasing rapidly due to the diversity of such power sources and equipment, the widespread use of electric vehicles has increased the number of storage elements connected to the grid, for example, in terms of power storage, which was the biggest weakness in the operation of power systems. Simply, as seen in Vehicle to Home, even if the power supply is disrupted due to an interruption in the power grid, the power supply from electric vehicles allows for the continual use of electricity, thus increasing each reliability. If it is possible to consider the adjustment of the charging time as well as the discharge, it is certain that it can also greatly contribute to the adjustment of the supply-demand balance.

While the increase in the number of power electronics equipment causes a decrease in the synchronization and inertia power as it is, it is also possible to add a function to support a stable supply of electric power when the flexibility of the control of the power electronics equipment is actively used. Various studies have been carried out on this under the name of Grid Forming Inverter. It is also easy to form an operation system to reduce the loss because the power electronics equipment can be controlled flexibly in response to changes in the surrounding conditions. The appropriate information acquisition and control combined with the Internet of things (IoT) technique has enabled re-

* President of Kyushu Institute of Technology (Ph.D in Engineering)

alization of multiple functions which greatly contribute to energy conservation of various systems and improvement of stability and reliability of electric power supplies. In addition to the progress of electric power control technology with power electronics equipment, it is certain that what previously thought impossible will be converted to common sense through the establishment of the environment in which anyone can inexpensively use a highly reliable, large-capacity communication technology with simultaneous, multiple connections like 5G, as well as high-performance information processing and information tracing technology.

I believe that if Edison had acquired the modern technology environment and made various assertions, the aspects of the electric power system would have been quite different, and this reminds me of the importance of creating innovation through new encounters between people in different fields and between technology and technology.

Power Supply Systems Contributing to Stable Power Supply and Energy Saving: Current Status and Future Outlook

KAWANO, Masashi* MATSUMOTO, Yasushi‡

1. Introduction

Investment in substations, data centers (DCs), and other social infrastructure is continuing to grow in Japan, North America, Europe, and other countries where economic growth is expected to be strong in the medium to long term, including those in Southeast Asia, India, and the Middle East. It is against this backdrop that demand for substation equipment, switchgear, and controlgear has remained steady as a means of supplying stable power. In particular, there is an increasing number of large-scale DCs being constructed in the DC market due to growth in IT system cloud computing, e-commerce, and content distribution services, as well as the spread of the Internet of Things (IoT) technologies driven by the expansion of 5th generation cellular network system (5G) communication networks. As a result, there is growing demand for smaller, more efficient, and higher capacity uninterruptible power systems (UPSs) to contribute to the stable supply of electric power.

In the Japanese market, transformers, switchgear, and other substation equipment that were installed in steel, chemical, and other material plants and railway companies in the 1970s and 1980s are increasingly being replaced due to aging. This investment is primarily being made to prevent accidents and improve both remote and on-site maintenance efficiency.

In addition, the need for plant-wide energy visualization and optimization is increasing to reduce CO_2 emissions and save energy from the perspective of decarbonization and energy cost control. It is expected that opportunities will increase not only for products that have high power conversion efficiency, but also for energy management systems (EMSs) that provide optimal energy supply and demand control.

* Power Electronics Energy Business Group, Fuji Electric Co., Ltd.

‡ Power Electronics Energy Business Group and Power Electronics Industry Business Group, Fuji Electric Co., Ltd.

In this paper, we describe the current status and future outlook of power supply systems that contribute to stable power supply and energy saving in accordance with Fuji Electric's technological initiatives.

2. Power Supply System That Contributes to Stable Power Supply for Data Centers

2.1 Promoting "Proposal of comprehensive electrical equipment"

There is growing demand for DCs to be built on a larger scale, but with shorter delivery times. At the same time, system designs are becoming more diverse and sophisticated to deliver, for example, initial configuration that facilitates efficient future system expansion completed within a short period of times after the start of operations.

Along with this trend, there is also strong demand for power supply system equipment that not only achieves high reliability and stability, but also realizes larger capacities and better future scalability within shorter construction periods. In order to meet the above needs, Fuji Electric offers "Proposal of comprehensive electrical equipment" which include extra-high-voltage receiving and transforming equipment, emergency power generation equipment, substation equipment, and UPS systems, in addition to standalone products. The solutions optimize systems, reduce installation footprints, and shorten construction periods.

Figure 1 shows a typical power system configuration for a large-scale DC. Substations are facilities that receive extra-high-voltage utility power and convert it to high-voltage. Their configuration is determined according to cost and reliability. In general, it is often configured with a "main line and backup line." These two lines are used to receive utility power and convert it to high-voltage. Emergency power generation equipment is used to supply power to loads during prolonged utility power outages. Substation equipment is installed in each building or floor to supply power to each zone. A UPS system is a piece of equipment that enables a continuous supply of power in the event of a power

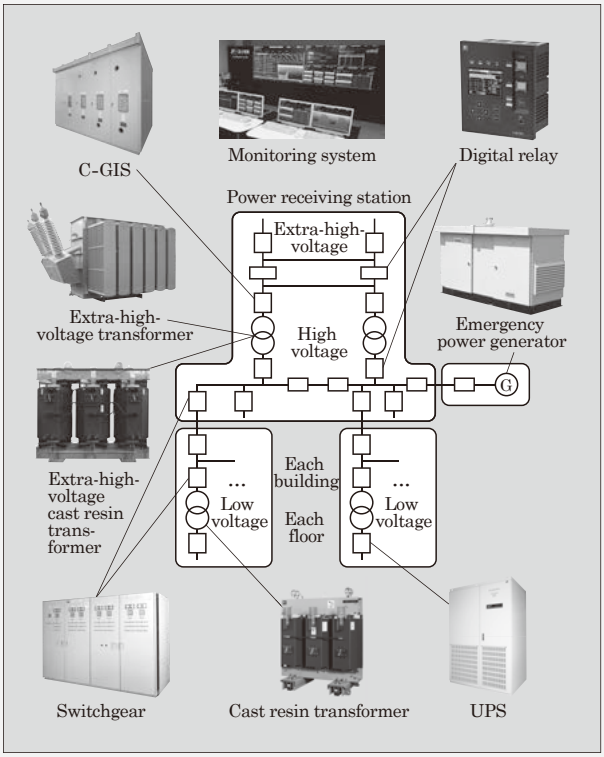

Fig.1 Typical power system configuration for a large-scale DC

outage until switching over to an emergency power generator. Each system has a redundant configuration that ensures a continuous and stable supply of electric power in the event of equipment failure or at times of power supply maintenance.

The most basic requirement of power supply systems for DCs is to improve reliability. The important measures to meet this requirement include building reliable systems in terms of maintenance inspections and recovery operations during unexpected equipment failures, as well as stable operation during regular operations and backups during power outages. Fuji Electric has leveraged its rich experience in supplying power supplies to DCs to create system construction technologies that enable it to offer its customers a wide line-up of power supply systems to meet their requirements (Refer to "Power System Construction Technology with Improved Redundancy and Maintainability" on page 14).

The increase in the scale of DCs has also increased the capacity of their transformers for UPS input. To respond this trend, Fuji Electric offers rectangular large-capacity 5-leg type MOLTRA "V-ECO MOLTRA" that has reduced height dimensions to fit into a standard transformer panel while maintaining the same installation footprint as conventional products in the large capacity range exceeding 1,000 kVA. (Refer to "Rectangular Large-Capacity 5-Leg Type MOLTRA to Meet the Needs of Energy Saving and Downsizing" on page 27).

2.2 UPS technology supporting power supply systems

Large-capacity UPSs are core systems to stabilize the power supply in large-scale DC systems. They are required to achieve higher capacities and energy saving, while facilitating shorter construction periods and overall system downsizing in terms of peripheral equipment, such as input transformers.

In order to improve the system's energy efficiency, a 3-level converter circuit using reverse-blocking IGBT (RB-IGBT), which is Fuji Electric's proprietary technology, has been adopted in rectifiers and inverters in UPSs to achieve the industry's highest level of efficiency as a continuous inverter power supply system. It also has a function to control the number of units to stop several power modules at low load factor so that the power conversion module can be operated with optimum efficiency. Furthermore, during normal operation, it reduces power loss by supplying power from the utility power supply. If there is a utility power supply failure, its high efficiency mode (HE mode) instantly switches to the battery to supply power. This enables power to be supplied with a high efficiency of 98.4% when the voltage and frequency are stable in the power supply.

Moreover, the UPS system has a reduced installation footprint and shortens installation work periods by using a structure that enables installation with rear-facing alignment and internal wiring between I/O panels and transformer panels.

Figure 2 shows the "UPS7500WX" high-capacity UPS for large-scale DC applications. It features the technologies described above (Refer to "High-Capacity Power Supply System That Contributes to Stable Power Supply for Data Centers" on page 9).

The 2N system is the most reliable system configuration in DCs. It makes the whole system redundant. Although this type of system is highly reliable, it requires a static transfer system cabinet

Fig.2 "UPS7500WX"

to switch systems. Its reliability greatly affects the overall reliability. To meet this need, Fuji Electric offers a high-reliability static transfer system cabinet. While improving the reliability of switching, the static transfer system cabinet uses the UPS synchronization function to shorten switching times and improve voltage stability during switching (Refer to "Static Transfer System Cabinet for Data Centers That Contributes to Stable Power Supply" on page 21).

Moreover, not only DC but also general factories, broadcasting and communication facilities, require a medium capacity UPS of 200 V system, and there are various kinds of capacity needs for the UPS alone. To respond to this need for various capacities, we have developed the "UPS6600FX" as a 200-V UPS capable of diagnosing component failures using an abnormal sign detection function. This UPS facilitates replacement work with its reduced installation footprint and improved equipment stability (Refer to "Medium-Capacity Uninterruptible Power Systems with Improved Replaceability and Stable Operation" on page 45).

3. Power Supply System That Contributes to Stable Equipment Operation

3.1 Energy management system

(1) Responding to trends for energy resilience through distributed grids

(a) Market trends

In response to international calls to address environmental issues through the Sustainable Development Goals (SDGs) and Environmental, Social and Governance (ESG) investment, the Japanese government announced in October 2020 that it will aim to become carbon neutral by reducing its overall greenhouse gas emissions to zero by 2050.

Companies in the market are quickly considering switching to renewable energy sources for their electricity consumption. Furthermore, solar power generation for in-house consumption and self-wheeling (transmission of power generated at the company's own power plant to its own equipment through its transmission and distribution network) and the power purchase agreement (PPA) models*1 are also gaining attention.

As a result, it is expected that renewable energy will continue to expand, but it is essential to strengthen the power grids that receive renewable energy.

At the same time, it has become a major issue in recent years to strengthen resilience against long-term energy supply disruptions caused by large-scale disasters such as torrential rains and earthquakes.

To expand renewable energy and strengthen resilience, the Japanese Diet passed and enacted the "Act of Partial Revision of the Electricity Business Act and Other Acts for Establishing Resilient and Sustainable Electricity Supply Systems" (Energy Supply Resilience Act) in June 2020. The Act went into effect in April 2022. The Energy Supply Resilience Act is a revised law to ensure a resilient and sustainable electricity supply system that can cope with frequent natural disasters, widespread expansion, and the transition to renewable energy as the main power source. The key points of the revision include developing disaster-resistant distributed power sources and grid infrastructure capable of supporting expanded use of renewable energy. This includes legislatively positioning power distribution businesses so that they can operate as standalone networks in the event of an emergency, while also allowing them to operate distribution networks that includes small distributed power sources in their respective regions.

Amidst these circumstances, there are various regions where distributed grids are being considered, with regional distributed power sources as the core. In the future, it is expected that technological verification and business profitability will be examined.

(b) Fuji Electric's initiatives

Fuji Electric has been contributing to the expansion of renewable energy and strengthening of resilience by developing and verifying relevant technologies and providing operational systems in demonstration projects such as remote island microgrids and regional energy management. Figure 3 shows the overall view of the local microgrid offered by Fuji Electric.

Local microgrids aim to reduce CO_2 emissions through localized energy optimization, maintain energy supply in the event of a disaster, and make effective use of local energy resources. To achieve these goals, Fuji Electric has developed and offered the following products and technologies.

(i) Community energy management system (CEMS)

CEMS predicts local energy demand and renewable energy output, and then creates optimal power generation plans to manage energy.

***1 PPA model:**

A model in which power consumers provide power generation facility installation sites to power purchase agreement (PPA) business operators, and the PPA business operators install, operate, and maintain the power generation facilities free of charge, and bill the power consumers for the electricity generated.

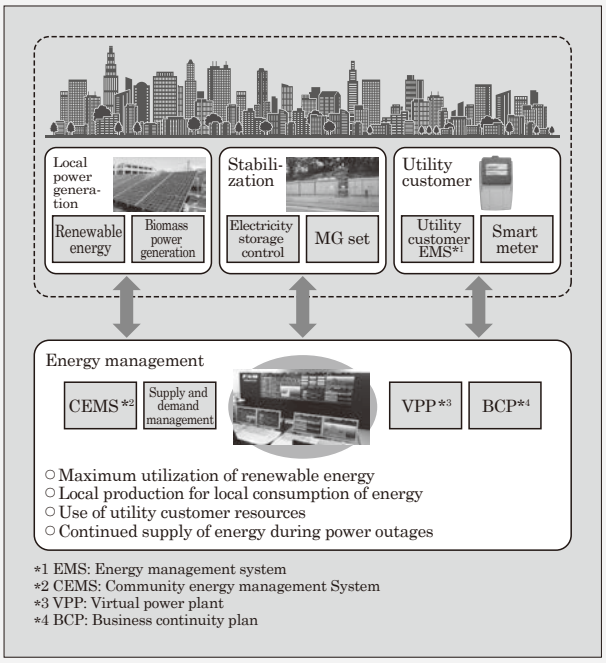

Fig.3 Overall view of the local microgrid offered by Fuji Electric

Demand response is also used to adjust demand.

(ii) Virtual power plant (VPP) resource aggregator

A VPP resource aggregator collectively manages consumers' resources (large storage batteries) and controls the battery system in response to various requests.

(iii) Supply and demand management

Supply and demand management predicts demand and creates power generation plans. The necessary power is then purchased on the electricity wholesale market based on the drafted power generation plan. It also acquires actual demand results and manages the supply-demand balance situation.

(iv) Storage battery control

Storage battery control regulates the charge and discharge of storage batteries in order to stabilize renewable energy generation and ensure efficient operation of generators. It also stabilizes the frequency of independent power systems in the event of an emergency.

(v) Storage battery-driven MG set

A storage battery-driven MG set is a power supply system that combines a storage battery-driven motor and generator. It contributes to controlling renewable energy fluctuations and to stabilizing independent power systems.

(2) Improved power management system functionality

System-based management is essential to ensure a stable supply of electricity. Fuji Electric uses the most advanced network technologies to offer power management systems with enhanced reliability, operability, and maintainability to meet the needs of replacement (Refer to "Electric Power Management System Contributing to Safe and Stable Railway Transportation" on page 32).

(3) Future developments

(a) Regional microgrid simulator

The building of microgrids based on distributed power sources, including renewable energy, require advance capacity designs for major power generation equipment, such as renewable energy equipment, cogeneration systems, and power storage equipment, on the basis of demand projections. In addition to normal operations, when considering operations during bulk power system outages, it is difficult to find optimal solutions because of the complex interaction of factors. Fuji Electric is developing a microgrid design support simulation system to solve this difficulty, based on its cultivated power simulation technologies. It will reduce the burden on designers and assist them in optimizing the design of operation-ready microgrids.

(b) EMS for business continuity plan (BCP) compatible EMS

Local microgrids need to ensure power supply to important facilities (evacuation centers, hospitals, etc.) through distributed power sources in preparation for long-term power outages due to disasters.

During small-scale operations, such as supplying power to single facilities or adjacent facilities, power can be restored according to defined procedures. However, when the scale of operations is extensive, restoring power using renewable energy generation requires sophisticated operations, such as gradually expanding the scope of restoration while balancing supply and demand. Fuji Electric is developing a restoration support function that can be integrated into CEMS by utilizing power simulation technologies.

3.2 Power receiving and transforming equipment technology supporting power supply systems

Power receiving and transforming equipment, such as transformers and switchgear, are core components of power grids that support power systems. Continuous efforts are being made to develop these technologies further. In addition to downsizing, higher efficiency, higher reliability, and maintenance-free operation, mainstream technological developments in recent years have been increasingly focused on digitization and reduction of environmental impacts. There has been increasing application of the international communication standard IEC 61850 to monitoring, control, and protective equipment of power receiving and transforming equipment, as well as to monitoring systems for transformer in-oil gas analysis and switchgear partial

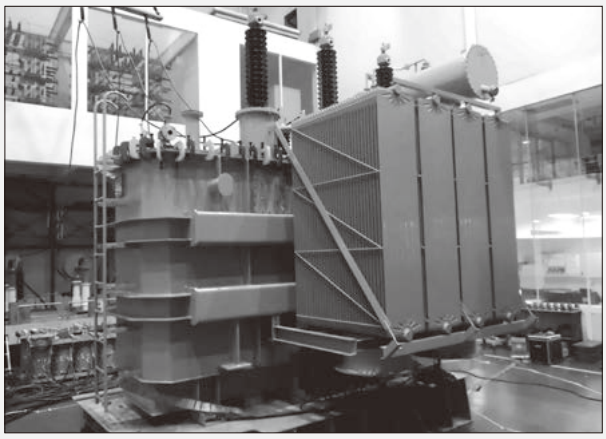

Fig.4 Globally compatible 115-kV, 50-MVA transformer

discharge and gas density.

In addition to developing technologies that achieve higher voltages and larger capacities in transformers, Fuji Electric has also been developing technologies to achieve downsizing. In 2018, we developed a globally compatible 115-kV, 50-MVA transformer that achieves the world's smallest size, mass, and oil volume, as shown in Fig. 4, by utilizing the latest analysis technology to optimize the core, winding, and cooling unit structure. We are continuing developments so that we can apply this technology to even higher voltage and larger capacity transformers.

At the same time, we have developed and released palm fatty acid ester filled transformers that use plant-derived insulating and cooling media to reduce environmental impacts (Refer to "Palm Fatty Acid Ester Filled Transformer That Contributes to Reducing Environmental Load" on page 50). In addition to reducing environmental impacts, we have developed and released a transformer with enhanced disaster-prevention features using natural esters derived from soybeans, which have a high flash point.

In terms of switchgear, we have a product lineup of gas-insulated switchgear (GIS) for rated voltages up to 300 kV. Figure 5 shows the 145-kV GIS for global markets that we have developed using the latest breaking and analysis technologies to respond to revisions in test standards in the IEC 62271 series, the international standard related to switchgear. We are developing this technology further for higher voltage GIS.

Conventionally, sulfur hexafluoride (SF_6) gas, which has a very high global warming potential, has been used as an insulator and arc interruption medium in GIS. In order to environmental load reduction, the utilization of GIS that use SF_6 alternative gases is progressing in Europe, the United States, and South Korea, where there are evolving regulations on SF_6 gas. In light of these international trends, Fuji Electric is also developing GIS that uses SF_6 alternative gases.

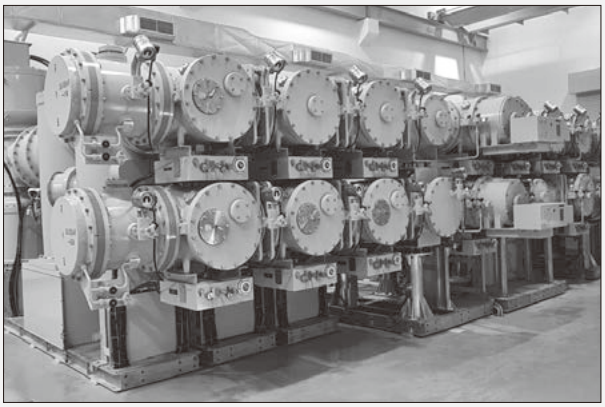

Fig.5 Globally compatible 145-kV GIS

3.3 Industrial power supply equipment that supports stable power supply

Capital investment in the industry of manufacturing materials, such as nonferrous metals, steel, chemicals, and green hydrogen, continues to expand globally. Fuji Electric provides industrial transformer rectifiers used to power electrolysis, melting, and smelting equipment utilized in the manufacture of these material products. In addition to ensuring power supply quality, industrial transformer rectifiers are required to have various features, such as countermeasures against harmonics leaking into grids, downsizing, redundancy, energy saving, high efficiency, and safety in the event of accidents. To meet these requirements, we are making full use of harmonic system analysis and various simulation analyses to provide solutions by taking advantage of our power supply systems along with standalone devices (Refer to "Industrial-Use Power Supplies Contributing to Stable Operation of Material Manufacturing Equipment" on page 39).

4. Postscript

In this paper, we described the current status and future outlook of power supply systems that contribute to stable power supply and energy saving in accordance with Fuji Electric's technological initiatives. Moving forward, we will continue to contribute to society by helping to stabilize and optimize the supply of electric power.

High-Capacity Power Supply System That Contributes to Stable Power Supply for Data Centers

HAMADA, Ippei*

ABSTRACT

In recent years, there has been an increase in the number of large-scale data centers (DCs) throughout the world as companies move information systems to the cloud and expand their use of e-commerce. This trend has also increased the demand for high capacity uninterruptible power systems (UPSs) capable of stabilizing the supply of power to the DCs. Fuji Electric, providing lineups of electrical equipment for power systems, has been promoting its Comprehensive Electrical Equipment Proposals that enhance supply reliability and economy. We have downsized our UPSs, which are key equipment of power systems, to reduce their footprints, migrated I/O-M functions to switchboards to shorten installation periods, and provided HE mode to save energy.

1. Introduction

In recent years, there has been an increase in the number of large-scale data centers (DCs) throughout the world as companies move information systems to the cloud and expand their use of e-commerce. This trend has also increased the demand for high-capacity power supply systems.

Fuji Electric has been providing DCs with electrical equipment, such as generators, uninterruptible power systems (UPS), gas-insulated switchgear (GIS), and transformers, as core components of large-scale power supply systems. The company uses its comprehensive technical capabilities to enhance the power supply reliability and economy of power supply systems. It is promoting its "Comprehensive Electrical Equipment Proposals" for all stages of the product life ranging from introduction planning to on-site construction and maintenance services to contribute to stable operation.

Fig.1 "UPS7500WX"

* Power Electronics Energy Business Group, Fuji Electric Co., Ltd.

In this paper, we describe a high-capacity uninterruptible power systems (UPSs) that contributes to the stable power supply of DCs. It uses our "UPS7500WX" high-capacity UPS (see Fig. 1), which is designed to meet the requirements of footprint reduction and energy saving.

2. UPS System for Large-Scale DCs

2.1 Overview

Figure 2 shows the overall configuration of the power supply system for DCs. Electric power from extra-high voltage substation equipment consisting of transformers, switches, and other devices, or from emergency power generation equipment, is supplied to UPS system equipment through UPS input device, which changes power sources using devices such as switches. Individual UPS systems then distribute

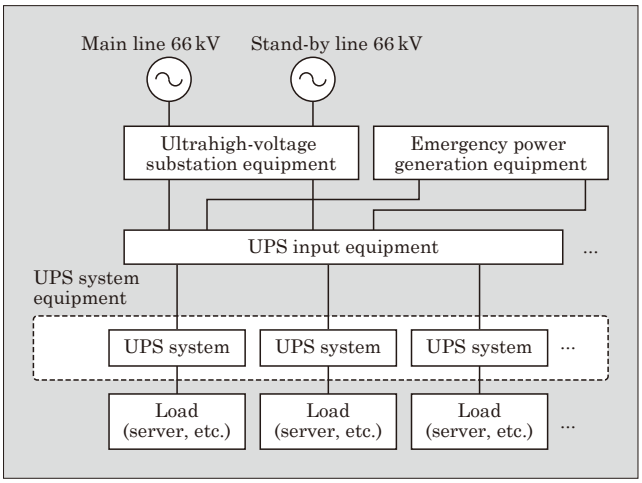

Fig.2 Overall configuration of the power supply system for DCs

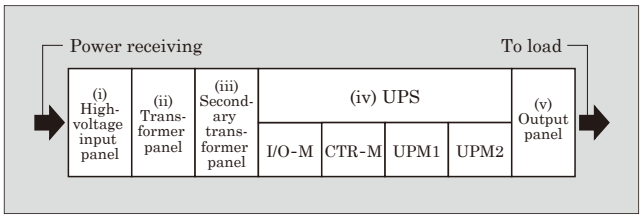

Fig.3 Example of UPS system configuration

power to servers and other loads. UPS systems are designed to protect servers and other information equipment from power failures, such as power outages and voltage fluctuations caused by lightning strikes, contributing to stable DC operations.

Figure 3 shows an example of a configuration for a UPS system. The UPS system consists of a high-voltage input panel, transformer panel, secondary transformer panel, UPS, and output panel. The high-voltage input panel, transformer panel, and output panel are generically referred to as peripheral panels. The high-voltage input panel receives the power from the UPS input equipment, and the output panel is connected to servers and other loads. Cables and bus ducts are used to connect the UPS to peripheral panels and between peripheral panels.

The UPS is the core piece of equipment in the UPS system. The basic configuration consists of an input and output module (I/O-M) for connecting main circuit cables and control signal lines, a control module (CTR-M) equipped with controllers and internal bypass circuits, and power conversion modules (UPM1 and UPM2) with a built-in rectifier and inverter.

2.2 UPS system challenges

(1) Reducing the installation footprint

A UPS system that comprises a high-capacity uninterruptible power system becomes large for the following reasons.

(a) Increased heat generation requires large heat sinks for cooling.

(b) Since the cross-sectional area of the conductor (busbar) increases in proportional to the square of the current value, the I/O-M that houses it needs to be larger.

At the same time, DC operators are requiring smaller footprints of electrical equipment to maximize the number of servers to be installed.[1]

(2) Shortening installation time

As the capacity of UPS systems increases, there is also an increase in the amount of wiring work since there will be more terminals that need to connect the UPS to peripheral panels and more cables and bus ducts used for the wiring.

DC operators need to set up servers and storage devices as quickly as possible. They thus require shorter on-site installation times for UPS systems and other power supply systems.

(3) Energy saving of UPS systems

Key equipment such as servers and storage devices require a high quality power feed with low fluctuations in voltage and frequency. On the other hand, some loads, such as air conditioning, are less affected by voltage and frequency fluctuations but consume a large amount of power. For these loads, the operation of UPS systems must prioritize energy saving over power quality.

3. UPS Systems with the “UPS7500WX”

3.1 Reducing UPS system footprint

(1) Reducing the size of the UPS

The UPS7500WX can be expanded in capacity from 600 kVA to 2,400 kVA by combining up to four 600-kVA power conversion modules (UPM) per system. Figure 4 shows the external dimensions of the UPS7500WX (1,200 kVA rated), and Table 1 shows its specifications.

The UPS7500WX (1,200 kVA rated) has a bottom surface with a dimensions of 3,500 mm wide and 900 mm deep, smallest in the industry. It can be installed compactly by placing it close to a wall or using two units back-to-back, because there is no need to provide maintenance space on the back or left and right sides of the unit.

(a) Improving the efficiency of UPM cooling

The interior of the UPM is divided into a forced-air cooling area (reactor, capacitor, rectifier, and inverter), where equipment with large heat generation is housed, and a self-cooling area (contactors and subcontroller), where equipment with small heat generation and no need for forced-air cooling is housed. Furthermore, only the forced-air cooling area is designed to directly receive cold air. This improves the cooling efficiency and reduces the size of the heat sink.

(b) Top exhaust and front maintenance

Forced air cooling is designed as a front intake and top exhaust system. This eliminates the need for exhaust space at the rear. The component layout enables maintenance to be performed from the front

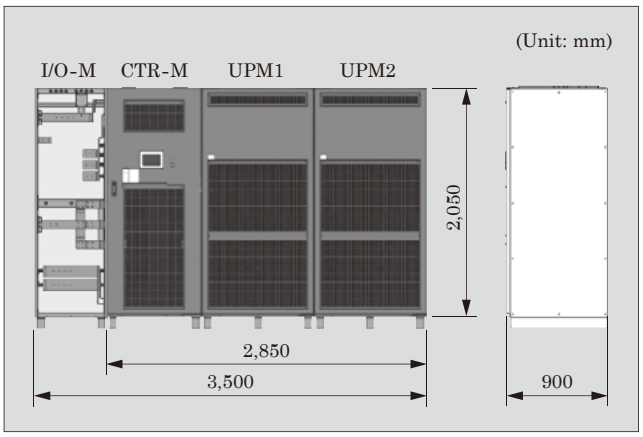

Fig.4 Outline of “UPS7500WX” (1,200 kVA rated)

Table 1 Specifications of the “UPS7500WX” (1,200 kVA rated)

Item		Specification
System		Normal inverter feeding (HE mode selectable)
Rated capacity		1,200 kVA/1,200 kW
Dimensions		W3,500 × D900 × H2,050 (mm) (Including the I/O-M) W2,850 × D900 × H2,050 (mm) (Not including the I/O-M)
Conversion efficiency (max.)		96.6% (VFI*1), 99.0% (VFD*2)
Switchover time		Uninterrupted (VFI), <2 ms (VFD)
AC input	Number of phases (wires)	Three-phase four-wire
	Voltage	380, 400, 415, 420 V
	Frequency	50/60 Hz
	Input power factor	0.99 (lag) or higher, 1.0 or lower
	Input harmonic current	Overall 3% or less
Bypass input	Number of phases (wires)	Three-phase three-wire or three-phase four-wire
	Voltage	380, 400, 415, 420 V
DC input	Rated voltage	480 V
	Type	Lithium ion battery, lead-acid storage battery
AC output	Number of phases (wires)	Three-phase three-wire or three-phase four-wire
	Voltage	380, 400, 415, 420 V
	Frequency	50/60 Hz
	Output power factor	0.7 (lag) to 1.0
	Voltage accuracy	±1% or less (load balancing)
	Transient voltage fluctuation	±3% or less (sudden load change)
	Voltage distortion rate	2% or less (linear load) 2.5% or less (IEC 62040-3)
	Overload capability	125%: 10 min, 150%: 1 min (At recommended temperature)
Environment	Ambient temperature	0°C to 40°C (recommended 25°C)
	Ambient humidity	5% to 95% (no condensation)
Communication protocol		Web/SNMP, Modbus*3 RTU, Modbus TCP/IP

*1 VFI: Voltage and frequency independent
*2 VFD: Voltage and frequency dependent
*3 Modbus is a trademark or registered trademark of Schneider Automation, Inc.

of the equipment, eliminating the need for maintenance space on the left and right sides.

These enhancements have resulted in a reduced installation footprint.

(2) Reducing the size of the UPS systems

In general, I/O-Ms for UPS systems, in addition to their function of connecting cables, are equipped with electrical components, such as surge absorbers that protect electronic equipment from surge voltages caused by lightning strikes. The UPS7500WX moves these electrical components into the CTR-M. This made it possible to build a UPS system without an I/O-M by incorporating functionality to connect cables during the design and manufacture of the secondary transformer panel and output panel. The width of the UPS7500WX without the I/O-M is 2,850 mm, as shown in Fig. 4. This reduced the installation footprint by 19%.

3.2 Shortening installation time

Figure 5 shows the panel configuration diagrams of the UPS systems installed side-by-side.

As shown in Fig. 5(a), conventional UPS systems are configured by connecting the UPS and peripheral panels, and the UPS and peripheral panels are wired through an I/O-M. This requires external wiring out-

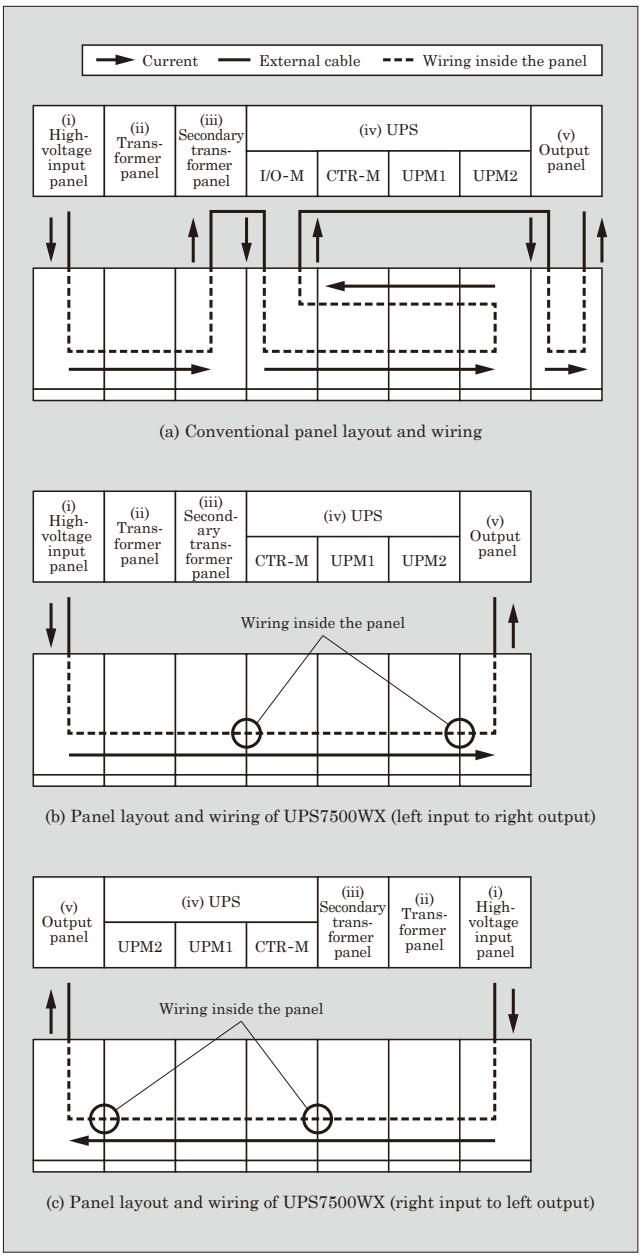

Fig.5 Panel configuration diagrams for UPS systems installed side-by-side.

side the panel using external cables and bus ducts. A larger DC increases the number of terminals and wiring work and lengthens the cable. This results in a longer installation period.

On the other hand, a UPS system that uses the UPS7500WX can be wired without an I/O-M. This means that all wiring between the UPS7500WX and the secondary transformer panel and output panel can be done inside the panel as shown in Figs. 5(b) and 5(c). Therefore, wiring outside the panel is limited to the input of the high-voltage input panel and the connection from the output panel to the load. This reduces wiring work and installation time compared to conventional systems.

The UPS7500WX can receive power from either the left or right side, as shown in Figs. 5(b) and 5(c). This is due to the interchangeable left and right layout of parts inside the CTR-M. The internal impedance and inductance remain the same regardless of whether power is received from the left or right side. This ensures that the quality of power supply is identical.

This design allows power to be received from either the left or right side, which is effective in reducing installation time when multiple UPS systems are to be installed.

Figure 6 shows the panel configuration diagrams (ceiling view) of the UPS systems installed side-by-side. As a specific example, it shows how two UPS systems can be installed back-to-back. Figure 6(i) through (iii) and (v) show the same panels as Fig. 5(i) through (iii) and (v). Conventional UPS systems can only receive power from a single side, as shown in Fig. 5(a). Therefore, as shown in Fig. 6(a), one UPS system can be wired to the UPS input equipment and server room at a minimum distance, but the other rear-mounted UPS system requires long-distance wiring from the UPS input equipment to the transformer panel, and from the output panel to the server room.

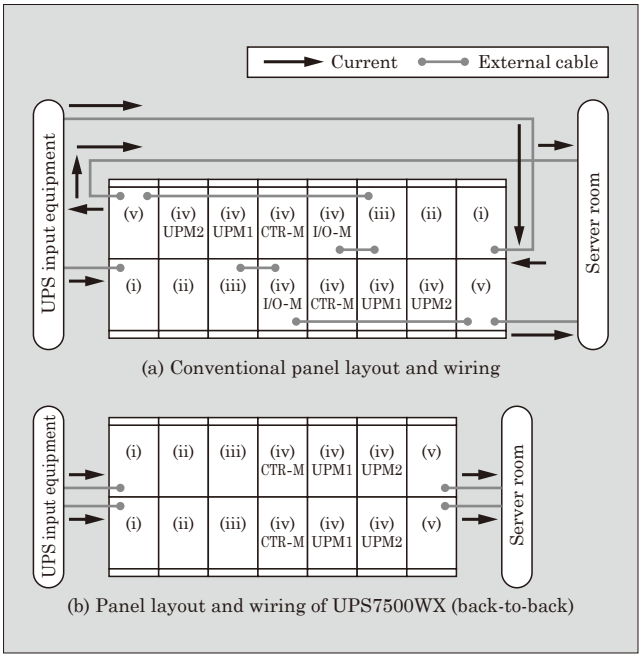

Fig.6 Panel configuration diagrams (ceiling view) of the UPS systems installed side-by-side.

In contrast, a UPS system using the UPS7500WX can receive power from either the left or right side, and the flow of electricity can be in one direction from the UPS input equipment to the server room, as shown in Fig. 6(b). This allows any UPS system to be wired at the shortest possible distance.

3.3 Achieving energy saving using a high efficiency mode (HE mode) bypass circuit

As shown in Fig. 7, the UPS7500WX is equipped with a hybrid bypass circuit [see Fig. 7(a)] and HE mode bypass circuit [see Fig. 7(b)]. By selecting these circuits according to the type of load, the UPS system can achieve high efficiency and energy saving.

The hybrid bypass circuit is also included in conventional systems. It is a normal inverter feeding type that converts power with a rectifier and inverter during normal operation. It comes with a parallel circuit consisting of an AC switch that uses a thyristor designed for short-time withstand current and a switch. If a power failure or abnormality occurs, it switches to bypass input without interruption.[2] Its power conversion efficiency is 96.4%, but the minimal fluctuations in voltage and frequency make it suitable for feeding

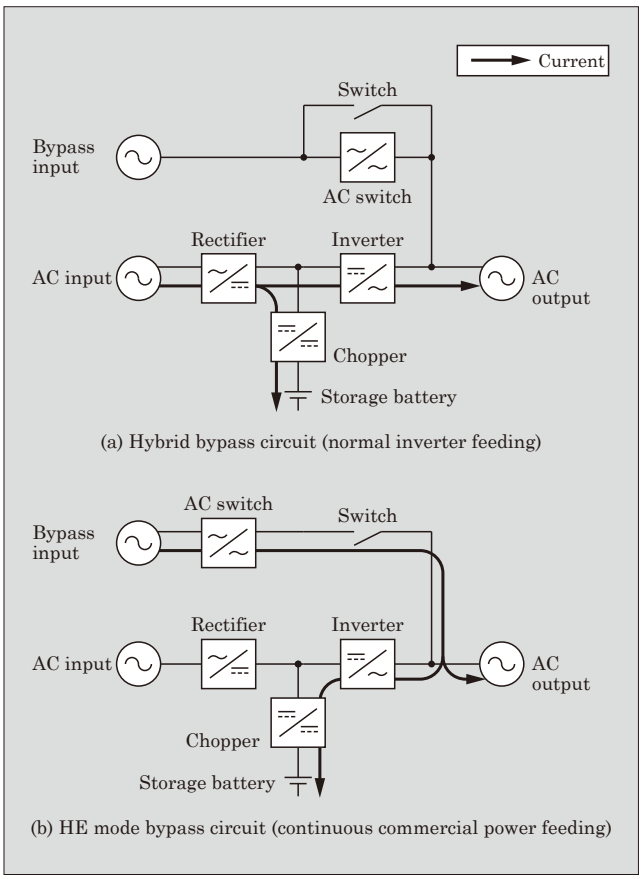

Fig.7 Selectable power feed methods

critical loads, such as servers and storage devices.

On the other hand, the UPS7500WX also comes with an HE mode bypass circuit that feeds the AC output from the bypass input during normal operations. It is a continuous commercial power feeding type that does not require a rectifier or inverter. Its series circuit consists of a switch and an AC switch that uses a thyristor designed for continuous operation current withstand. Its power conversion efficiency of 98.4% exceeds that of the hybrid bypass circuit. However, it is susceptible to voltage and frequency fluctuations, and it is suitable for use in loads with low power quality requirements, such as air-conditioning. Since it is a continuous commercial power feeding system, it is expected to be used to achieve energy saving in various countries with high grid power quality.

Moreover, if it detects a thyristor misfire or power failure due to power outage or lightning strike when the HE mode bypass circuit is selected, the system automatically switches to inverter power supply within 2 ms. In general, it takes approximately 10 ms for a power failure to adversely affect electrical and electronic equipment. However, this system performs switchover at a much faster speed.

4. Postscript

In this paper, we describe a high-capacity uninterruptible power system that contributes to stable power supply for data centers.

Moving forward, Fuji Electric will continue to contribute to reducing various environmental impacts, including global warming, through products and services that utilize its energy and environmental technologies.

References

(1) Iwamoto, S. et al. Compact Medium-Voltage Switchgear for Data Centers. FUJI ELECTRIC REVIEW. 2019, vol.65, no.3, p.142-146.

(2) Sato, A. et al. UPSs for Hyper Scale Data Centers. FUJI ELECTRIC REVIEW. 2019, vol.65, no.3, p.147-150.

Power System Construction Technology with Improved Redundancy and Maintainability

YASUMOTO, Koji* NEMOTO, Kenji* KITADANI, Yuji*

ABSTRACT

The capacity of uninterruptible power systems (UPSs) has been expanding to meet the needs of larger data centers. Power systems with UPSs face various challenges, such as ensuring redundancy during maintenance, preventing erroneous operation, and suppressing voltage fluctuations during power supply switching and energizing of large-capacity transformers. The measures to build a power supply system with enhanced redundancy and maintainability include an N+2 system to ensure redundancy and sequence circuits using a rotation control key switch to prevent erroneous operation. In addition, inrush exciting current, a cause of voltage fluctuations, can be suppressed through the sequential closing of circuit breakers during a power supply switching and the replacement of two parallel high voltage transformers with a single high capacity transformer.

1. Introduction

In recent years, there has been an increase in the construction of data centers (DCs) as companies move information systems to the cloud and expand their use of e-commerce. In addition, DCs have been increasingly consuming more power due to their use of large-capacity and high-density servers and storage devices. As a result, there is a need to increase the efficiency and capacity of the uninterruptible power systems (UPSs) that feed power to their loads.

In order to achieve higher efficiencies, Fuji Electric has been developing three-level control, three-phase, four-wire UPSs[(1)], UPSs that combine the features of normal inverter feeding and continuous commercial power feeding[(2)], and quantity control functions for parallel redundant configurations. We also offer UPSs that use lithium-ion batteries[(3)]. Furthermore, we are developing a high-capacity UPS system for large-scale DCs.

However, there are also some challenges that need to be addressed when using high-capacity equipment. An increase in UPS capacity lead to the increased capacity of high-voltage transformers. This, in turn, increases the inrush exciting current and results in a larger voltage drop when the power supply is activated. This degradation in power quality can cause load stoppages and unnecessary power supply switching during power restoration and maintenance. Meanwhile, N*1+1 (one stand-by unit is installed as a backup) redundant system loses its redundancy during maintenance and failures. This has created the need to ensure redundancy at such times. An N+2 redundancy system keeps its redundancy during maintenance and failures, but the optimal equipment configuration for this type of system needs to be carefully considered.

In this paper, we describe a technology for constructing power supply systems with enhanced redundancy and maintainability.

2. Overview of Large-Scale Power Supply System

Figure 1 shows an example of a large-scale DC power supply system configuration. The power supply system consists of extra-high-voltage substation equipment, secondary substation, UPS system equipment, and emergency power generation equipment.

The extra-high-voltage substation equipment generally uses a primary and stand-by configuration as a means of receiving power. In such a case, redundancy is ensured for the extra-high-voltage power-receiving circuit breaker, extra-high-voltage transformer, and extra-high-voltage secondary circuit breaker. The maximum contracted power of a receiving voltage of 66 kV is 50 MW and consists of two or four 25- to 30-MVA extra-high-voltage transformers. Therefore, secondary substations are installed at 8 to 10 locations. Each of these secondary substations has a capacity of 3 MVA for receiving power from a single extra-high-voltage transformer. The UPS system equipment is redundant, consisting of multiple high-capacity UPS systems, as well as stand-by units. The emergency power generation system is also redundant, consisting of primary and stand-by units.

*1 N: UPS system configurations generally use the term N. N refers to the number of UPSs equal to the load capacity.

* Power Electronics Energy Business Group, Fuji Electric Co., Ltd.

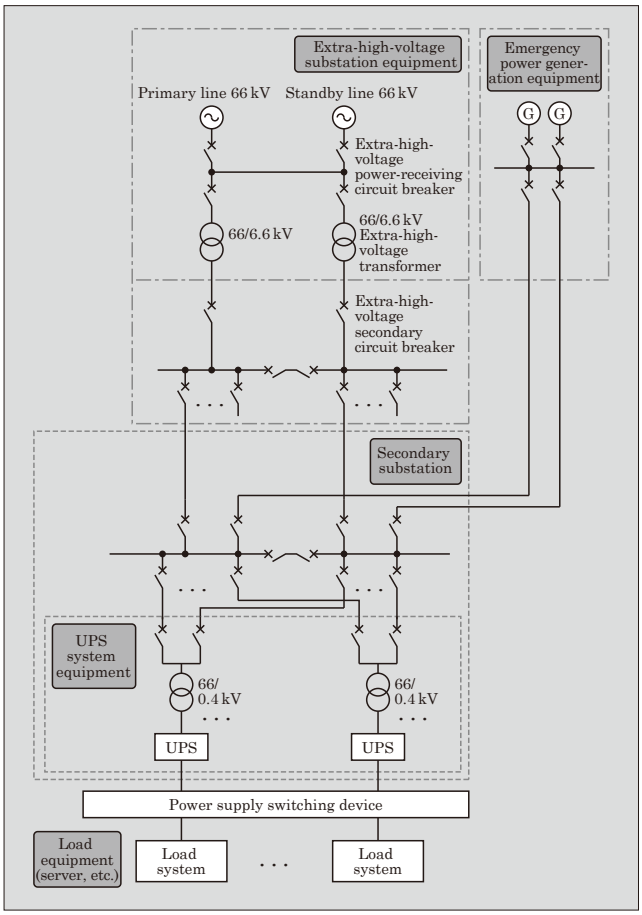

Fig.1 Example of power system configuration for a large-scale data center

3. Challenges Facing Conventional Power Supply Systems

3.1 Ensuring redundancy during maintenance

The N+1 configuration has been often used for redundant UPS systems. However, keeping its redundancy during maintenance and failures is a challenge because the stand-by unit is not available.

3.2 Preventing misoperation during maintenance

UPS maintenance requires power supply switching. This involves releasing the interlock that prevents the UPS from using both inverter and commercial power feeding. However, preventing misoperation is a challenge. If the circuit breaker used for supplying power is accidentally opened after the interlock is released, power supply can be interrupted.

3.3 Suppressing voltage fluctuations caused by power supply switching during maintenance

For the following reasons, it is a challenge suppressing voltage fluctuations caused by power supply switching during maintenance.

(a) In UPS systems, common backup or 2N (where N stand-by units are installed as backups) is a highly reliable redundant configuration. However, if each of the UPSs receives power from a different extra-high-voltage transformer, phase displacement will occur in the output voltage of each UPS due to differences in the load factor of the extra-high-voltage transformers. Operating the load switching device in such an asynchronous state takes 0.1 to 0.2 s to switch the UPS, during which time the power supply to the load is stopped.

(b) When receiving power in a normal and stand-by configuration, the extra-high-voltage power-receiving circuit breaker, extra-high-voltage transformer, and extra-high-voltage secondary circuit breaker of the extra-high-voltage substation equipment are redundant, but the secondary substation is cut off due to power supply switching when those devices undergo maintenance.

(c) Because of the use of a large-capacity UPS, the capacity of a high-voltage transformer increases, the magnetizing inrush current of the transformer also becomes large, and the voltage fluctuation when the power is turned on becomes larger than small capacity system.

4. Constructing Power Supply Systems with Enhanced Redundancy and Maintainability

4.1 Ensuring redundancy during maintenance

(1) Comparison of N+2 redundant UPS systems

To ensure redundancy during times of maintenance, there are N+2 (two stand-by units installed as backups) configurations available for UPS system facilities. Table 1 shows a comparison of parallel redundancy, stand-by redundancy, and common backup (catcher method) in an N+2 redundant UPS system.

(a) Parallel redundancy

If one UPS output short-circuits, a short-circuit current flows to all remaining UPSs. As a result, it becomes necessary to take short-circuit protective coordination and bus circuit isolation measures.

If one UPS fails and stops, the healthy UPSs continue to supply power to the load. However, if multiple UPSs fail, the healthy UPSs also become overloaded and stop due to load concentration. In such a case, all UPSs must switch to the uninterruptible bypass circuit to continue supplying power to the load.

(b) Stand-by redundancy

If the UPS output of a primary unit is shorted, the corresponding UPS switches to the uninterruptible bypass circuit. At that time, the UPS of the common backup unit continues to supply power. However, a short-circuit current also flows to the UPS of the common backup unit, and it is also switched to the uninterruptible bypass circuit. Therefore, short-circuit protective coordination is necessary to determine the operational order of cir-

Table 1 Comparison of parallel redundancy, stand-by redundancy, and common backup (catcher method) in an N+2 redundant UPS system

	Parallel redundancy	Stand-by redundancy	Common backup (catcher method)
Configuration diagram	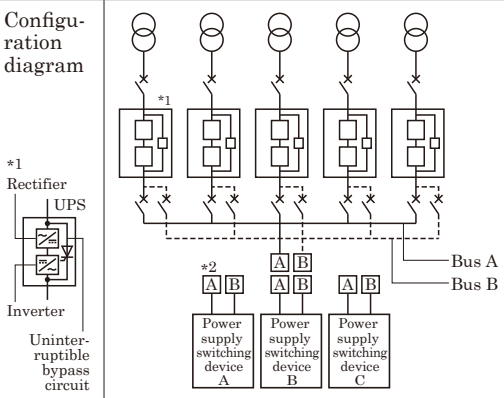	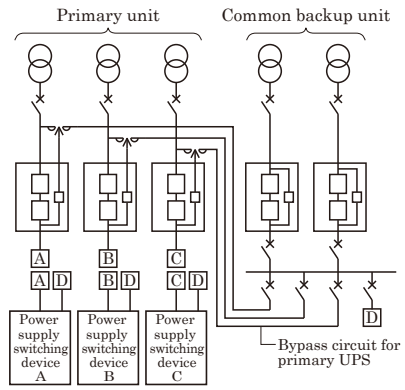	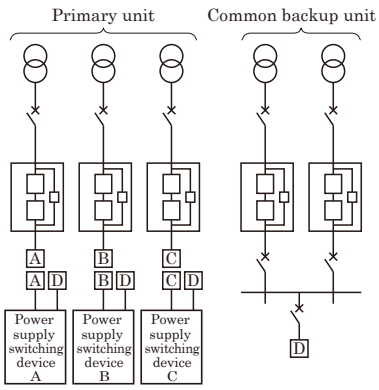
System operation	○ All UPSs share the load and operate in parallel. ○ The load is selected and receives power from bus A or B.	○ Two common backup units in parallel ○ The load is selected and receives power from a primary unit and a common backup unit.	○ Two common backup units in parallel ○ The load is selected and receives power from a primary unit and a common backup unit.
Reliability	○ Distributed uninterruptible bypass circuit ensures the supply of power. ○ Short-circuit protective coordination requires attention because short-circuit current flows from all UPSs when a short circuit occurs.	○ Requires switching to uninterruptible bypass circuit at times of failure. ○ Control is complicated for the power supply switching device when multiple units fail. ○ Short-circuit protective coordination requires attention because short-circuit current flows through both the primary UPS and backup UPS when a short circuit occurs.	○ Requires switching to uninterruptible bypass circuit at times of failure. ○ Does not require a power supply switching device for the bypass circuit. ○ Short-circuit current flows only to the relevant UPS when a short circuit occurs, and therefore the impact on other UPSs is small.
UPS output	Synchronous	Synchronous	Non-synchronous (Adding external synchronous control allows for synchronization)
Maintainability	Maintain one unit at a time while continuing to supply power with the UPS that ensures redundancy.	Maintain one unit at a time while continuing to supply power with the UPS.	Maintain one unit at a time while continuing to supply power with the UPS.

*2 A B C D: Connect with the same symbols

cuit breakers.

If the UPS of a primary unit fails, the common backup unit is connected to the uninterruptible bypass circuit of the failed UPS in order to continue supplying power. However, if more than one unit fails, control becomes complicated because the power supply switching device installed in the uninterruptible bypass circuit of the UPS of the primary unit must switch the power supply appropriately.

(c) Common backup (catcher method)

Even if the UPS output of a primary unit is shorted, the short-circuit current does not flow to or affect the other UPSs. As a result, load operation can be continued by switching to the power feed from the UPS of the common backup unit. If the UPS of the primary unit fails, power will continue to be supplied since it switches to the uninterruptible bypass circuit.

This is a highly reliable configuration, and it also features a significantly simpler circuit configuration compared with the other methods.[4]

In light of the above, it can be said that common backup (catcher method) is superior in terms of overall reliability and economic efficiency.

(2) Suppressing voltage fluctuation during UPS switching using an external synchronization method

During maintenance of the primary unit of the common backup (catcher method), the power supply switching device is used to switch from the primary unit to the common backup unit. However, the switching is accompanied by voltage fluctuations when it is in an asynchronous state where the voltage phase of the primary unit and common backup unit are different from each other.

Therefore, it uses external synchronization with a loop connection to keep the voltage output of each UPS in a synchronized state at all times. This enables a fast switching time of 5 ms with no impact on the load.

Figure 2 shows the external synchronization method using a loop connection. A communication board is installed in each UPS, and loop connection is made with a communication cable. Even if the communication cable is disconnected or the communication board is damaged, it maintains connection between each UPS, enabling synchronous control to continue. Synchronous control is basically implemented as follows:

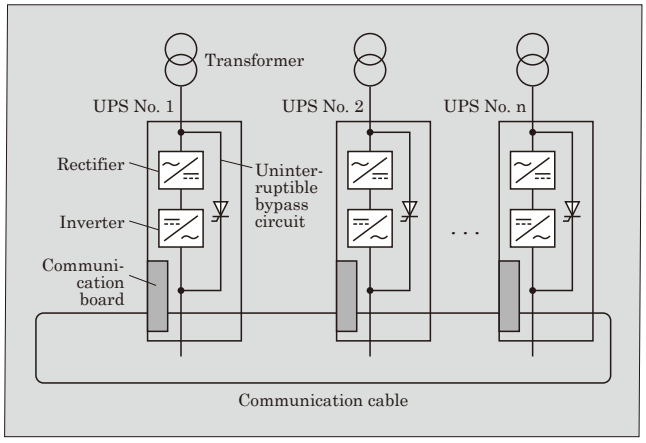

Fig.2 Configuration of external synchronization method using loop connection

(a) Synchronize to each UPS bypass power supply when each AC input power supply is synchronized.
(b) Select a normal UPS output and operate it according to its phase when the phase of the AC input power supply fluctuates.
(c) Select a normal UPS output and operate it according to its phase when the AC input power supply stops.

4.2 Preventing misoperation during maintenance

It uses a circuit with a rotation control key switch to prevent misoperations. The rotation control key switch has a solenoid and key switch auxiliary contact. The key switch can be rotated by exciting the solenoid. The rotation of the key switch is controlled by a sequence circuit, and the key cannot be removed when it is inoperable.

As an example, Fig. 3 shows the maintenance procedure for a UPS system that uses a rotation control key switch to prevent misoperations.

(1) During normal operation

The UPS output circuit breaker cannot be operated when it is ON, and the maintenance bypass circuit breaker cannot be operated when it is OFF. The key inserted into the rotation control key switch of the maintenance bypass circuit breaker is fixed in the operation-prohibited position and cannot be removed.

(2) Switching from inverter power feeding to bypass power feeding

When switched to bypass power feeding, the rotation control key switch of the maintenance bypass circuit breaker becomes rotatable. When it is placed in the circuit breaker lock-released (keyed) position, the circuit breaker operation lamp lights up and the maintenance bypass circuit breaker becomes operable.

(3) Energizing the maintenance bypass circuit

Closing the maintenance bypass circuit breaker will turn on the circuit breaker operation lamp on the UPS output circuit breaker and will allow the UPS output circuit breaker to be operable. The key on the maintenance bypass circuit breaker side is switched to the UPS circuit breaker side.

(4) Performing UPS system maintenance

When the UPS output circuit breaker is opened, the circuit breaker operation lamp on the maintenance bypass circuit breaker side turns off and the maintenance bypass circuit breaker becomes inoperable. In order to prevent the UPS from being energized during maintenance, the UPS output circuit breaker becomes inoperable when the rotation control key switch is placed in the operation lock (keyed) position. In this position, maintenance of the UPS system can be performed.

4.3 Suppressing voltage fluctuations caused by power supply switching during maintenance

(1) Uninterruptible power supply switching

Power supply switching is necessary when performing maintenance for extra-high-voltage substation equipment, secondary substations, and UPS system equipment. Figure 4 shows the uninterruptible power supply switching during maintenance.

(a) During maintenance of extra-high-voltage power-receiving circuit breakers

Uninterruptible power supply switching is possible by using loop switching, a method in which the power-receiving circuit breakers of the primary and stand-by lines are closed and put into a wrapped

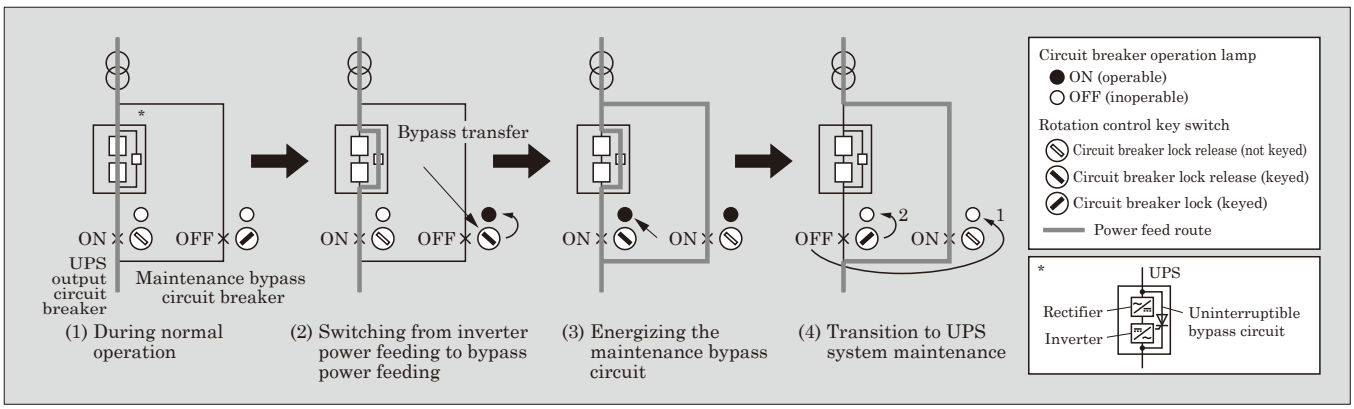

Fig.3 UPS system maintenance procedures

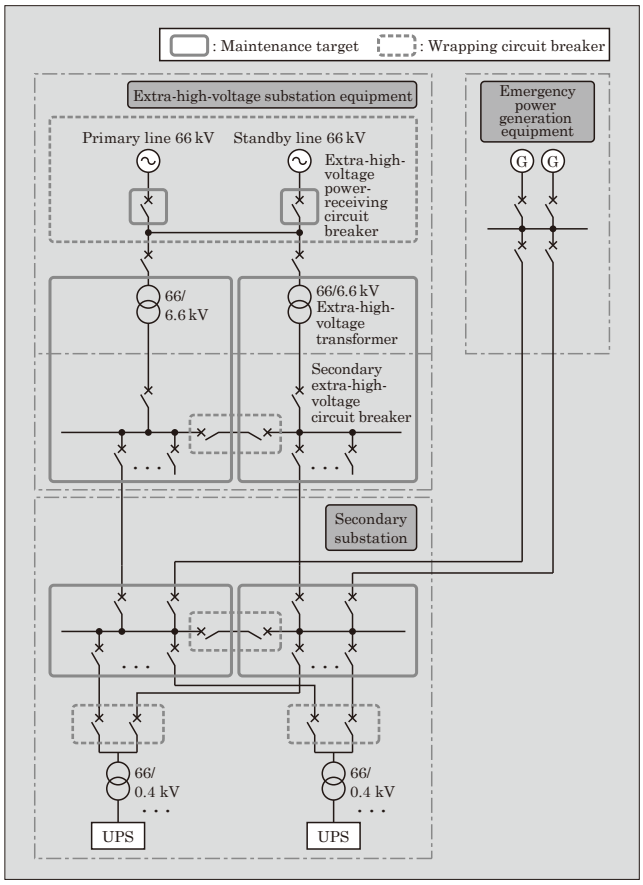

Fig.4 Uninterruptible power supply switching during maintenance

state*2. However, during loop switching, cross current flows between the primary and stand-by lines due to the difference in impedance between the two systems and the load factor on the system side. Therefore, it is necessary to fully consult with transmission system operators about the setting values of short-circuit and ground-fault relays, relay locks during switching, and other relevant matters.

(b) During maintenance of extra-high-voltage transformers

After the circuit breaker linking with the high-voltage bus on the secondary side of the extra-high-voltage transformer is activated (during wrapping), the circuit breaker on the secondary side of the transformer is opened. As a countermeasure against short circuits during wrapping, it is necessary to select equipment with twice the breaking capacity for the circuit breakers beyond the secondary bus of the extra-high-voltage transformer, because twice the short-circuit current will flow through them.

(c) During maintenance of secondary high-voltage circuits of extra-high-voltage transformers

After wrapping the circuit breaker that links with the high-voltage bus on the secondary side of the extra-high-voltage transformer, it is necessary to wrap the circuit breaker that links with the high-voltage bus on the secondary substation side. After doing this, the secondary high-voltage circuit of the extra-high-voltage transformer to undergo maintenance must be stopped. However, there will be transmission on two lines for the secondary side of the extra-high-voltage transformer and the high-voltage bus of the secondary substation during wrapping, and the three-phase current may become unbalanced due to differences in the impedance of each cable. This can cause the detection of ground faults. Therefore, the ground-fault relay should be locked during wrapping.

(d) During maintenance of the high-voltage circuit of the secondary substation

The circuit breakers of the secondary side of the extra-high-voltage transformer, the secondary substation, and the primary side of the UPS can be maintained by wrapping them.

(2) Suppressing voltage fluctuations during high-voltage transformer activation

(a) Voltage drop due to transformer inrush exciting current

The inrush exciting current of Fuji Electric's high-voltage transformers is approximately eight times the rated current, and its time constant increases in proportion to the capacity. Table 2 shows the calculation results of the momentary voltage drop due to the inrush exciting current*3 of the high-voltage transformer. Calculation conditions include a short-circuit withstand capacity of 2,500 MVA on the system side and an instantaneous transient reactance of 28%. The maximum voltage drop due to the activation of a high-voltage transformer powered by utility power is 8%. When power is fed by emergency power generation equipment, the voltage drop can exceed 20% due to the large transient reactance of the generator.

(b) Sequential activation of high-voltage circuit breakers

It is necessary to avoid simultaneous activation of high-voltage transformers because voltage drops

Table 2 Calculation results of the momentary voltage drop due to the inrush exciting current of the high-voltage transformer (Capacity of the transformer to be activated is 2,000 kVA)

Power supply system	Capacity (MVA) × No. of units	Voltage drop rate (%)
Utility power	25 × 1	8.1
Emergency power generation equipment	6 × 2	20.3

*2 Wrapped state: The state of two lines being connected to a single bus.

*3 Transformer inrush exciting current: The inrush current that is generated when a voltage is applied while the transformer is not energized.

can cause load stoppages and unnecessary power supply switching. Therefore, the high-voltage circuit breakers (HVCBs) are sequentially activated at intervals of approximately twice the time constant*4.

An extra-high-voltage substation equipment of 66 kV is typically accompanied by secondary substations at 8 to 10 locations. For example, if there are 10 secondary substation HVCBs for each extra-high-voltage transformer, then 80- to 100-HVCBs will need to be activated in sequence.

There are several patterns for activating secondary substation HVCBs. These include when both systems are being restored to power, when one system is being restored to power, when power is restored during maintenance, and when power is fed by generators.

There are many HVCBs and various activation patterns available, it is thus important to configure the activation interval of the HVCBs so that they do not activate at the same time. Figure 5 shows an example of a flowchart during utility power restoration.

A group consists of two secondary substations, and the HVCBs within the group are activated at an interval of 1 second. The HVCB activation interval after restoring each secondary substation is common to all units. The activation command received from the secondary side of the extra-high-voltage transformer is acquired at 0.3-second intervals for each group to prevent simultaneous activation of the HVCBs.

(c) Example of technology for suppressing inrush exciting current in large-capacity high-voltage transformers

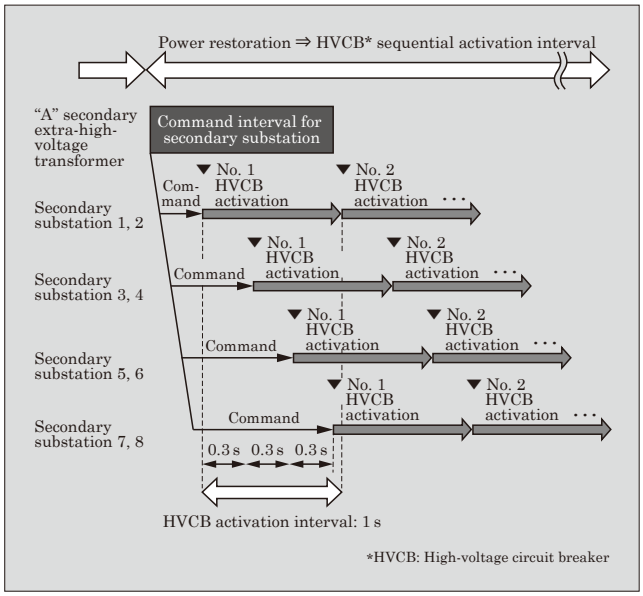

Fig.5 Example of a flowchart during utility power restoration

*4 Time constant: The time required for the inrush current to decrease to 1/e.

Table 3 Comparison of inrush exciting current of two 1,500-kVA units and one 2,660-kVA unit

Item	1,500 kVA × 2 units (Parallel redundancy)	2,660 kVA × 1 unit (Self-cooled 2,000 kVA)
Cooling system	Natural cooling	Fan cooling
%Z (%)/ rated capacity	5.4	8.3
Inrush exciting current (A) (crest factor)	1,520 × 2 units = 3,040	1,700
Rated efficiency (%)	99.3	98.8
75% capacity efficiency (%)	99.4	99.0

As UPS system capacity increases, voltage drop due to inrush exciting current in large-capacity high-voltage transformers becomes significant. For example, a 2,400-kVA UPS system uses a 2,660-kVA high-voltage transformer to have a voltage margin for UPS loss and battery charging. The standard high-voltage transformers, which is up to 2,000 kVA, is typically combined with two 1,500-kVA transformers in parallel. However, this creates the risk of overlapping inrush exciting current for the two units. Meanwhile, developing a new 2,660-kVA high-voltage transformer would cause other problems, such as increase in size and mass. That is because it becomes necessary to take measures to suppress the inrush exciting current, such as lowering the magnetic flux density of the iron core and increasing the number of turns to increase inductance. As a solution, we have delivered the capacity of 2,660 kVA by utilizing a 2,000-kVA self-cooled transformer and cooling it with a fun to suppress the size, mass, and inrush exciting current.

Table 3 compares the inrush exciting current of two 1,500-kVA units and one 2,660-kVA unit. Using fewer number of units with one 2,660-kVA unit achieves compactness and the significant reduction of inrush exciting current. When the single 2,660-kVA UPS system is operated in an N+1 redundant system, a load factor (75% capacity efficiency at N = 3) of 99.0% can be ensured during normal operations.

5. Postscript

In this paper, we described a technology for constructing power supply systems with enhanced redundancy and maintainability.

The N+2 redundant UPS system showed excellent reliability and economic efficiency through the use of common backup (catcher method). We also showed that voltage fluctuations can be suppressed during maintenance by using external synchronous control of UPSs, avoiding power failure switching due to power supply wrapping, and utilizing forced cooling of large-capacity transformers.

Looking ahead, Fuji Electric will continue to provide highly reliable power supply systems.

References

(1) Yasumoto, K. et al. High-Efficient Power Supply Systems Utilizing 3-Phase 4-Wire Uninterruptible Power Systems. FUJI ELECTRIC REVIEW. 2019, vol.65, no.1, p.58-63.

(2) Yasumoto, K. et al. “UPS7000HX-T4” High-Efficiency UPS with Continuous Commercial Power Feeding and Quantity Control Function. FUJI ELECTRIC REVIEW. 2019, vol.65, no.3, p.151-155.

(3) Yasumoto, K. et al. “UPS7000HX Series” and “UPS6000DX Series,” Using Lithium Ion Batteries. FUJI ELECTRIC REVIEW. 2018, vol.64, no.4, p.221-226.

(4) Yasumoto, K. et al. “Common Backup Systems for Data Centers with Large-Capacity UPS. FUJI ELECTRIC REVIEW. 2020, vol.66, no.1, p.72-78.

Static Transfer System Cabinet for Data Centers That Contributes to Stable Power Supply

MURATSU, Hiroki* WAKABAYASHI, Fumiya* TOKUDA, Tsuyoshi*

ABSTRACT

The need for supplying stable power to information equipment, such as servers is increasing as the use of cloud information systems and e-commerce are expanding. Fuji Electric has developed a static transfer system cabinet necessary for transferring in a 2N (duplex) system, a redundant configuration for power supply systems. It has a hybrid switch that uses mechanical switches and semiconductors switch together to speed up transferring, lower loss, and downsize the cabinet. It also deliver functions, such as accommodating a built-in bypass breaker for maintenance, supporting the redundancy of major components, and reducing the effect on the load when switching under UPS synchronization, to improve the reliability of power systems, contributing to stable power supply.

1. Introduction

In data centers, which play a major role in the information society, the need is increasing for supplying stable power to information equipment, such as servers.

A measure to improve the reliability of power supply systems is to build a redundant system in which spare power supply equipment is incorporated. Even when a failure occurs in one power supply, the other unit continues to supply power. In such a case, the equipment that transfers power systems is called a static transfer system cabinet, whose reliability greatly affects the reliability of the whole power supply system.

This paper describes the static transfer system cabinet for data centers that improves voltage stability and maintainability to supply stable power.

2. Static Transfer System Cabinet Overview

2.1 Redundancy of power supply systems

Figure 1 shows examples of typical configurations of power supply systems using uninterruptible power systems (UPSs).

Assuming that N is the required number of UPSs, an N+1 configuration can supply power from the remaining UPSs even if one of the UPSs fails. A "2N" configuration is a dual power supply system including power receiving systems. Table 1 shows the advantages of these configurations. The "2N" power supply system has the highest reliability, but requires the static transfer system cabinet to transfer between the two power supply systems.

* Power Electronics Energy Business Group, Fuji Electric Co., Ltd.

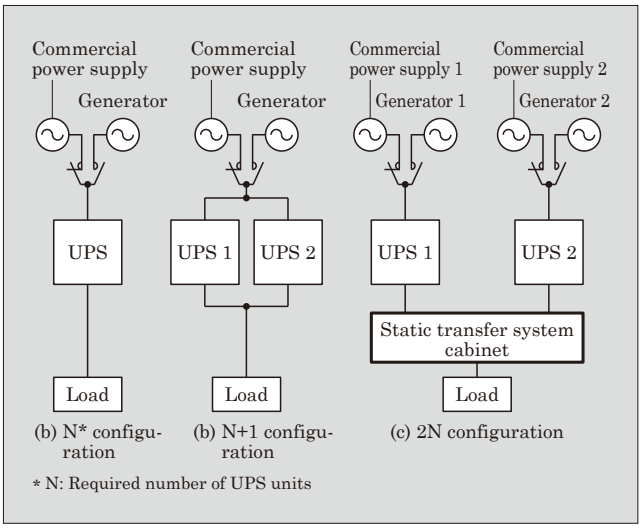

Fig.1 Examples of typical configurations of power supply systems (when N = 1)

Table 1 Comparison of power supply system configurations

○ : Advantageous, △ : Standard, × : Disadvantageous

	N	N+1	2N
Cost	○ Low in cost due to the simplest configuration	△	× High in cost due to the largest number of equipment
Reliability	× Unable to cope with power outage or momentary power failure in the event of a UPS failure	△ Able to cope with power outage or momentary power failure even if one UPS fails. However, if an accident occurs in a common part such as the UPS input or output component, there is a risk of power supply stoppage.	○ Able to supply power even in the event of a failure or a trouble not only in a UPS but also in higher level systems (such as a power supply or generator)

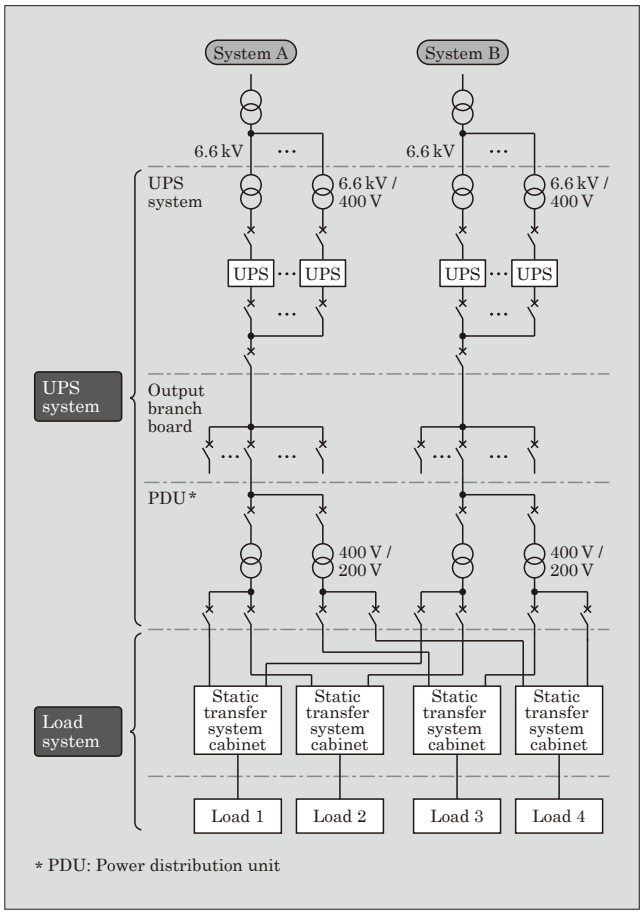

Fig.2 Example of power supply system configuration

2.2 Power supply system configuration using the static transfer system cabinet

Figure 2 shows an example of a configuration for power supply systems combining the static transfer system cabinets and UPSs. This configuration is to divide a UPS output according to the load capacity, and with transformers provided individually, perform power supply system transferring for load systems using the static transfer system cabinets. Thus, even if a failure occurs in one of the systems, the power supply from the other system can continue, thereby providing a highly reliable power supply system.

2.3 Internal configuration of a static transfer system cabinet

Figure 3 shows the internal configuration of a static transfer system cabinet. It is composed of a high-speed opening, double-throw magnetic contactor (mechanical switch) (83R) connecting the power supply input of system A and system B to the bus output, quick-acting bidirectional semiconductor switches (THA, THB) connected in parallel with 83R, input switches (non-trip switches) (52RA, 52RB), bypass breakers for maintenance (52MA, 52MB), and an output bus circuit-breaker (52 L). Output magnetic contactors (42RA, 42RB), normally in a closed state, are provided to

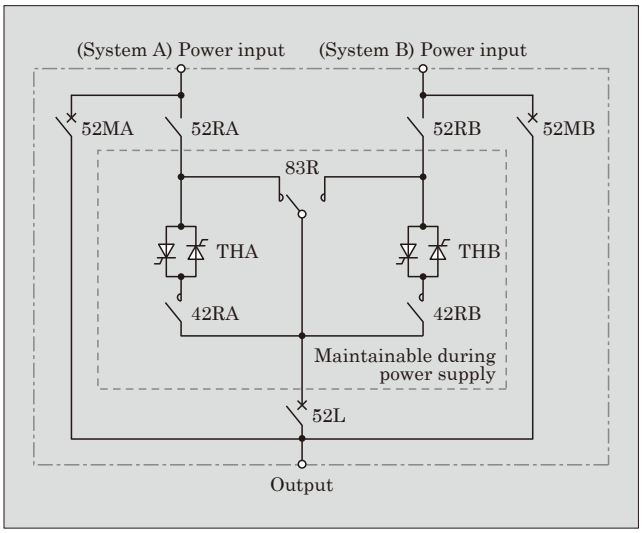

Fig.3 Internal configuration of the static transfer system cabinet

prevent a sneak current from the other power supply when a power outage occurs in the power supply input component and to disconnect the line when a semiconductor switch failures.

52RA, 52RB and 52 L are breakers for maintenance purposes and are always in a closed state during operation.

3. Problems with Conventional Static Transfer System Cabinets

3.1 Compatibility between transferring speed enhancement and low power loss and size reduction

During power supply transferring, the power supply to loads is instantaneously cut off. It is thus important for static transfer system cabinets to perform transferring operation at high speeds.

For this reason, conventional static transfer system cabinets have used continuously energized semiconductor switches, which have high responsiveness, but they are disadvantageous in that they cause large power loss because of the need for continuous energization and affect power quality because of their frequency dependence. In addition, the semiconductor switches require coolers and cooling equipment, which increase the overall equipment size.

To cope with these problems, some systems have used mechanical switches rather than semiconductor switches for transferring. The closing time, however, is usually several tens of ms, and even a high-speed type takes 10 to 20 ms, meaning that they are not suitable for speed enhancement.

3.2 Maintainability improvement

Regular maintenance is essential to maintain the reliability of static transfer system cabinets. However, conventional static transfer system cabinets have no bypass circuit that enables maintenance under a continuously energized state. For this reason, it has

sometimes been necessary to perform maintenance work while carrying out wiring outside the cabinets. On the other hand, there has been a problem that the incorporation of such a bypass circuit in the cabinet leads to increase in the number of wires, resulting in increase in the cabinet size.

3.3 Stable power supply to loads during transfer

Data centers are rated at the Tiers* according to various factors, including earthquake risk assessment and UPS reliability. The Tier level (importance) is ranked at 1 to 4, and Tier 4 power supply systems, used for high-importance loads, use redundant (N+2 or 2N) transmission paths. Some data centers, therefore, use a 2N system with the static transfer system cabinet, and in terms of stable power supply to high-priority loads such as server equipment, it is necessary to suppress voltage fluctuations associated with transferring to a different power supply so as not to affect the loads.

4. Newly Developed Static Transfer System Cabinet

4.1 Overview

Figure 4 shows the appearance of the static transfer system cabinet, and Table 2 lists the specifications. The static transfer system cabinet is available in three current capacities of 400, 600 and 800 A, with each type supporting three-phase three-wire input and single-phase three-wire input.

4.2 Compatibility between transferring speed enhancement and low power loss and size reduction

By building a hybrid switch that uses a mechanical switch and a semiconductor switch together, it has become possible to shorten the time when the output is in a non-voltage state at the time of transferring and to reduce the influence on load equipment.

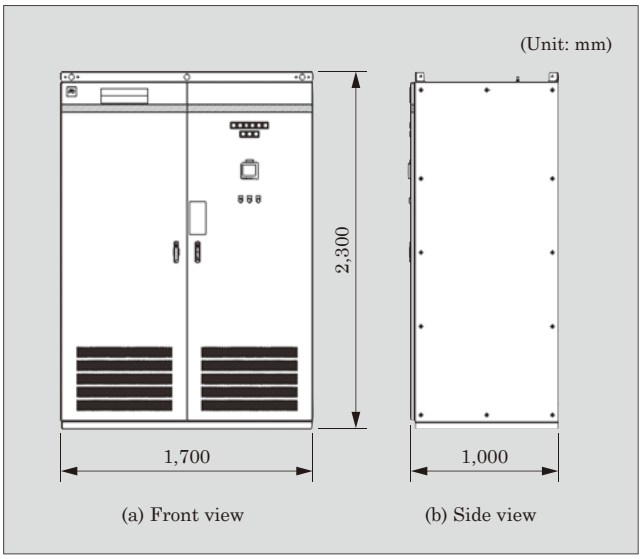

Fig.4 Static transfer system cabinet (800 A)

Table 2 Specifications of the static transfer system cabinet

Item		Specification
Rated current		400 A, 600 A, 800 A
AC input AC output	Rated voltage	3-phase 3-wire 100 V, 105 V, 200 V, 210 V 1-phase 3-wire 200 / 100 V, 210 / 105 V
	Voltage fluctuation range	±10%
	Frequency	50 / 60 Hz
	Frequency fluctuation range	±5%
AC output	Current overload capacity	800%, 1 s (normal time) 300%, 1 cycle / 125%, 1 s (transferring time)
Synchronization condition	Voltage difference	8 V or less
	Frequency difference	5 Hz or less
	Phase displacement	8.5° or less
Transferring time	Manual transferring	5 ms or less
	Automatic transferring	5 ms or less (synchronous time) 0.3 s or less (asynchronous time)
Structural specifications	Dimensions	400 A: W1,200 × D1,000 × H2,300 (mm)
		600 A: W1,300 × D1,000 × H2,300 (mm)
		800 A: W1,700 × D1,000 × H2,300 (mm)

The configuration of this hybrid switch has been also used in Fuji Electric's UPSs. In this way, the static transfer system cabinet uses UPS technologies, including control equipment and detection circuits, to achieve high-speed transferring operation.

(1) Transferring speed enhancement

Figure 5 shows an operation timing chart at the time of transferring. During power supply from system A, the A side of the mechanical switch (83R) is energized and the semiconductor switch on the A side (THA) is not energized. Manually transferring a power source to the system B will send instructions to the mechanical switch (83R) and the semiconductor switch (THB) to energize the B side. First, after approximately 1 ms, semiconductor switch B (THB) becomes energized, and power supply from the system B starts. Several tens of ms after the transferring, the B side of the mechanical switch (83R) also becomes energized. After this, it continues to be energized and semiconductor switch B becomes de-energized. As described above, one of the features of the hybrid switch is that the non-voltage time is shortened by supplying power through the semiconductor switch B (THB) during the transferring operation of the mechanical switch (83R).

Figure 6 shows the voltage and current waveforms at the time of manual power supply transferring from system A to system B. A short transferring time of 0.4 ms and no output voltage fluctuations allow power systems to continue to supply power stably without load stoppage.

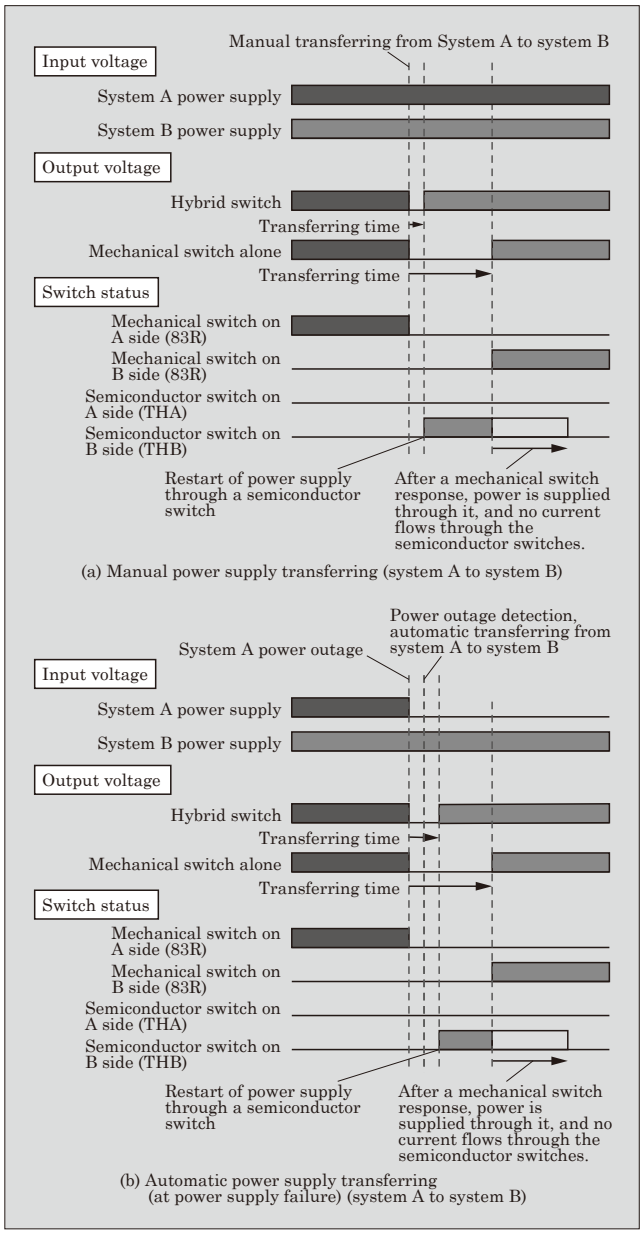

Fig.5 Operation timing chart at the time of transferring (image)

Figure 7 shows the voltage and current waveforms at the time of automatic power supply transferring from system A to system B at the time of a power outage. By detecting a power outage immediately to perform instantaneous transferring, the static transfer system cabinet can minimize the time of instantaneous power interruption to approximately 1.5 ms. Although not shown in Fig. 7, with the use of a mechanical switch alone, the instantaneous interruption time becomes 10 ms.

The same operation as described above also applies to the transferring from system B to system A.

(2) Low power loss and size reduction

The static transfer system cabinet can reduce loss by supplying power through the mechanical switch during continuous power feeding. Further, since the semiconductor switches are energized only for a short

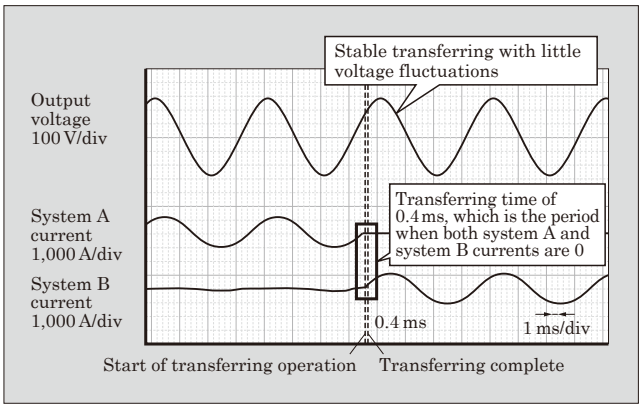

Fig.6 Voltage and current waveforms at the time of manual power supply transferring (system A to system B)

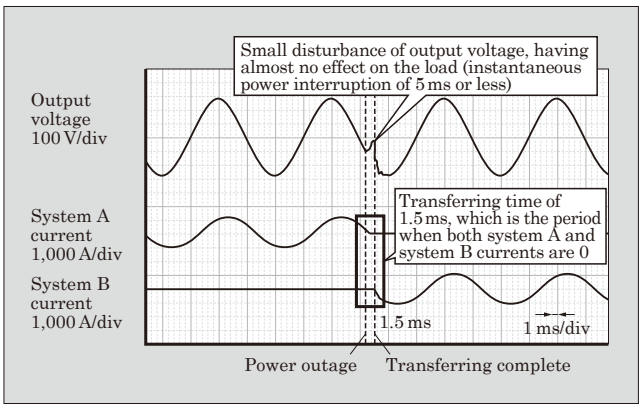

Fig.7 Voltage and current waveforms at the time of automatic power supply transferring (system A to system B)

time at the time of transferring, low capacity ones can be selectable with respect to the continuous rated thermal current, and cooling becomes unnecessary. It thus has lower power loss and smaller size than conventional panels.

4.3 Maintainability improvement

Figure 8 shows an example of the maintenance procedure of the static transfer system cabinet. The static transfer system cabinet has built-in maintenance bypass breakers (52MA, 52MB). During maintenance, breaking 52RA, 52RB and 52 L with either 52MA or 52MB closed allow a specific part to be de-energized. This enables maintenance, replacement and operation check of internal equipment while keeping continuous load feeding.

The static transfer system cabinet consists of the areas that are energized and de-energized during maintenance. The de-energized area houses periodic replacement parts, such as power supplies, switches and control circuits. This layout achieves compact cabinet size and permits maintenance while supplying power to loads.

In addition, it uses same parts as those used in UPSs for the power supply and the control circuits for detecting power outage and driving semiconductor

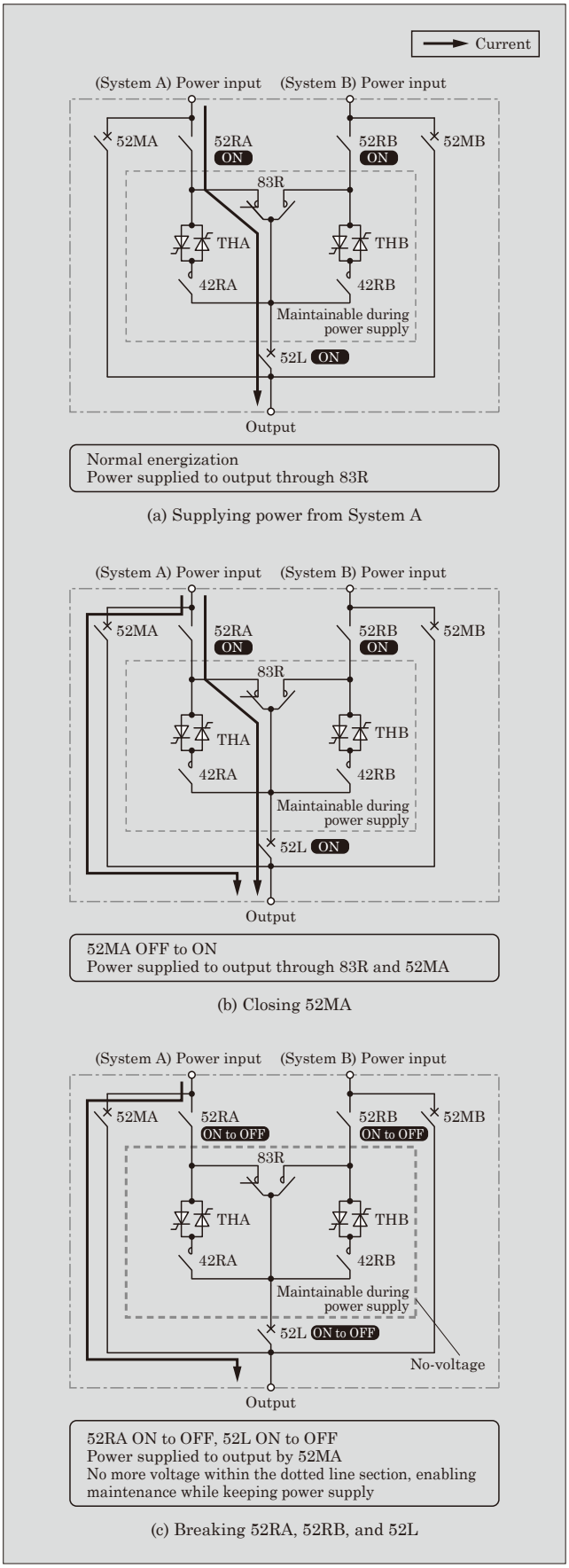

Fig.8 Example of the static transfer system cabinet maintenance procedure

switches to standardize maintenance parts. Reducing the types of maintenance parts in power supply systems as a whole, we have made it possible to keep maintenance parts available firmly to achieve rapid recovery in the event of failure.

Among the components of the static transfer system cabinet are power supplies for control and device driving, which are configured in duplex not to hinder switching even when a failure occurs in a power supply.

4.4 Stable power supply to loads at transferring

For the purpose of power supply quality improvement, the static transfer system cabinet performs transferring between the input power systems A and B with the two inputs being synchronized, thereby preventing voltage and phase surges and reducing the influence on loads.

The basic operation of the UPS is to perform transferring to a commercial power supply without voltage fluctuations by synchronizing with its own bypass voltage when a failure occurs in it. On the other hand, 2N power supply systems with the static transfer system cabinet, the voltages of the two systems must always be synchronous. Therefore, the cabinet controls the UPSs by exchanging signals with them to synchronize the voltages of the UPS output on the side that is not supplying power to loads with the UPS output voltage on the side that is supplying power to loads.

Figure 9 shows an example of the power supply system configuration for the static transfer system cabinet using the function for synchronization with the other system of the UPS. When the cabinet supplies power from the power supply of system A to the load, the UPS in the system B receives a signal from the cabinet and synchronizes with the output voltage of system A. In addition, the UPS in the system B transmits an interlock signal to the UPS in the system A not to synchronize the UPS of system A with the output voltage

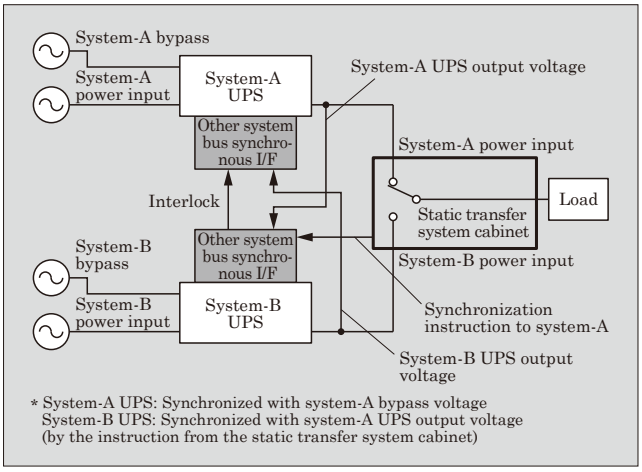

Fig.9 Example of the power supply system configuration of the static transfer system cabinet using the function for synchronization with the other system of the UPS

of system B. Without this interlock, synchronization is not completed because both systems attempt to synchronize with the other side system at the same time, and the cabinet cannot recognize the completion of the synchronization, which is needed to move to the next operation.

Through cooperation with the UPS synchronization function, the static transfer system cabinet has improved reliability to provide power supply solutions.

5. Postscript

This paper described the static transfer system cabinet for data centers as a product that contributes to stable power supply. This product has promise to be used for a wide range of power supply equipment that requires high reliability, other than data centers.

Fuji Electric will continue to introduce new technologies and provide power supply systems that meet customer expectations.

Rectangular Large-Capacity 5-Leg Type MOLTRA to Meet the Needs of Energy Saving and Downsizing

NAGATSUYU, Tomohiro* MIYATA, Tomokazu*

ABSTRACT

Electrical facilities are being required to improve energy efficiency to reduce greenhouse gas emissions and achieve carbon neutrality. Meanwhile, data centers and semiconductor factories have recently become using larger capacity cast resin transformers (MOLTRA) to respond to rising power demand, however, also requiring downsizing. To meet this need, Fuji Electric has developed the "V-ECO MOLTRA," rectangular large-capacity 5-leg type MOLTRA. It uses a 5-leg wound iron core whose core and coils are rectangular shaped. As a result, its height is 15% lower while maintaining the same energy-saving performance and footprint than that of the conventional product.

1. Introduction

With the aim of achieving carbon neutrality or a decarbonized society by 2050, there is a demand for the improvement of energy efficiency in electrical equipment to reduce greenhouse gas emissions.

In data centers and semiconductor factories, for which the market is expanding due to the advancement of digitalization in society, uninterruptible power systems (UPSs) are increasing in capacity[1] as the demand for electric power rises, and in turn, the capacity of transformers is also increasing. The number of cases where power distribution equipment is installed indoors is increasing, making it important to reduce the size of the equipment.

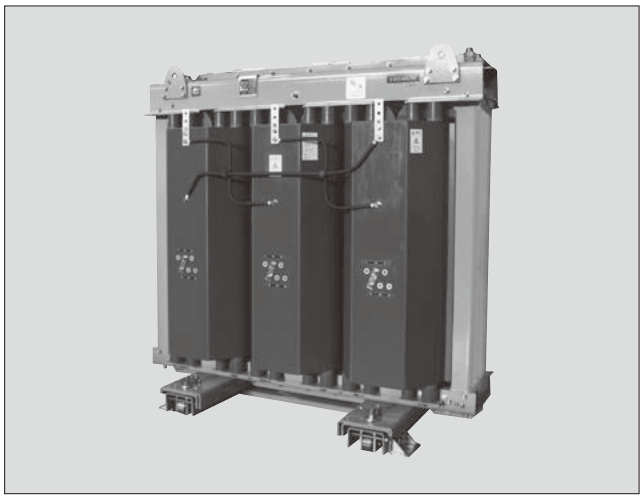

Fig.1 "V-ECO MOLTRA," rectangular large-capacity 5-leg type MOLTRA

* Power Electronics Energy Business Group, Fuji Electric Co., Ltd.

Fuji Electric's product MOLTRA*1 has been designated as specified equipment in the Act on the Rational Use of Energy (Energy Saving Act). It has also offered the "Top Runner MOLTRA 2014," which meets the second judgment standard that came into effect in April 2014 (Top Runner Transformer 2014*2).

In response to the need for large capacity, high efficiency and compact size (for indoor installation) described above, Fuji Electric has developed the "V-ECO MOLTRA," a rectangular, large-capacity 5-leg type MOLTRA with a reduced height (see Fig. 1) while maintaining the same energy-saving performance and footprint of the conventional product.

2. Large-Capacity MOLTRA

2.1 Overview

Fuji Electric has launched the "Top Runner MOLTRA 2014," which meets the requirements of the Top Runner Transformer 2014. In addition, it has released the "Amorphous MOLTRA" and "Super-Eco MOLTRA II" as ultra-high efficiency products mainly for small- and medium-capacity applications, respectively. Figure 2 shows the product line-up.

*1 MOLTRA: Fuji cast resin transformer (registered trademark of Fuji Electric Co., Ltd.)

*2 Top Runner Transformer 2014: Transformers that have achieved an efficiency higher than the standard energy consumption efficiency of the secondary judgment criteria prescribed in the "Criteria for manufacturers on improvement of performance of transformers" (Public Notice of Ministry of Economy, Trade and Industry No. 71 in 2012) for specified equipment under the Energy Saving Act

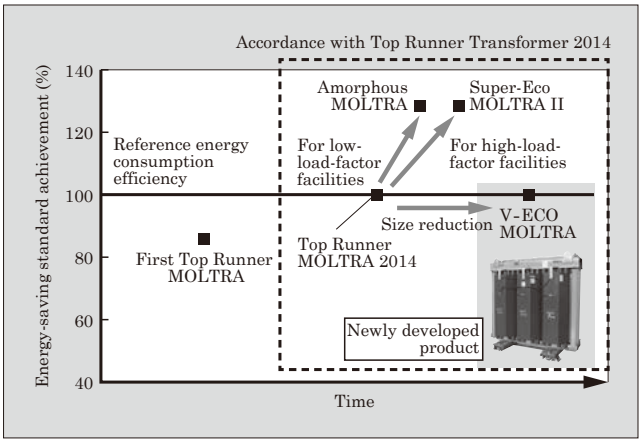

Fig.2 Product line-up

Fig.4 Switchboard

2.2 Structure

Table 1 shows the coil shape and core structure for each capacity class of the Top Runner MOLTRA 2014. The models with capacities of 1,000 kVA or less use rectangular-shaped coils and three-leg wound cores as shown in Fig. 3(a). Meanwhile, the models with capacities greater than 1,000 kVA use round-shaped coils and three-leg stacked cores as shown in Fig. 3(b).

2.3 Challenges

Generally, the Top Runner MOLTRA 2014, which is used in data centers and factories, is housed in a switchboard as shown in Fig. 4. Figure 5 shows the MOLTRA installed in a switchboard. The switchboard transforms high-voltage electricity supplied from power stations or substations to low-voltage electricity. Switchboards should be designed to be standard 2,300 mm or less in height and reduce the footprint as much as possible in terms of dimensional constraints, such as the size of the electric room, ceiling height, overhead electric circuit space, and the loading and unloading route. The method of pulling in wiring cables into a switchboard varies depending on the installation, but when pulling in from the top, wiring space is required between the MOLTRA and the top of the switchboard, as shown in Fig. 5. For this reason, the MOLTRA must have dimensions that not only allow it to fit into a standard-height panel enclosure, but also allow the switchboard to have a space above it. Therefore, as capacities become larger, the size reduction of external dimensions has become a challenge. Such size reduction has become important because more and more power distribution equipment is being installed indoors.

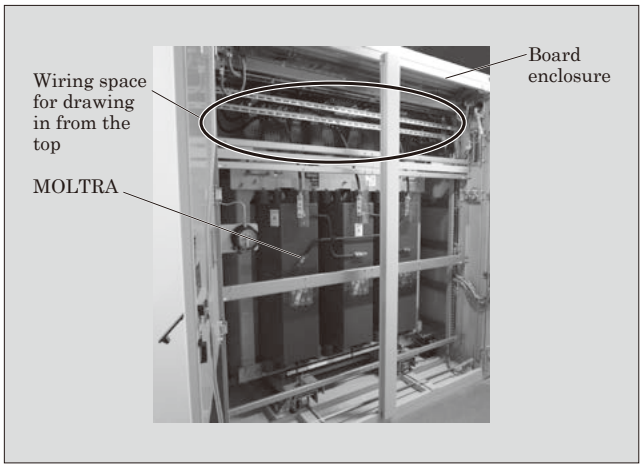

Fig.5 MOLTRA installed in a switchboard

Table 1 Coil shapes and core structures of the "Top Runner MOLTRA 2014"

Number of phases	Capacity	Coil shape	Core	
			Number of legs	Type
Three-phase	1,000 kVA or less	Rectangular	Three-leg type	Wound core
	More than 1,000 kVA	Round	Three-leg type	Stacked core

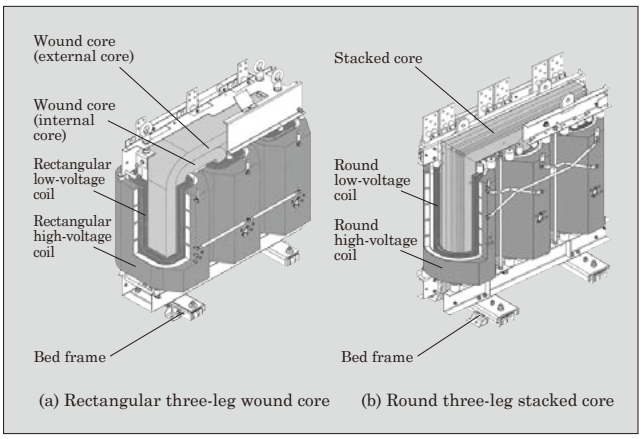

Fig.3 MOLTRA structures

3. Overview of the "V-ECO MOLTRA," a Rectangular Large-Capacity 5-Leg Type MOLTRA

In response to the issues described in Section 2.3,

we have developed the new V-ECO MOLTRA, which serve as a large-capacity MOLTRA of more than 1,000 kVA. It has an energy consumption efficiency equivalent to that of the Top Runner MOLTRA 2014 but with reduced height.

3.1 Size reduction

It has lower height than the Top Runner MOLTRA 2014s having a capacity of over 1,000 kVA by 15% to fit it into a standard height panel enclosure with 2,300 mm. Nevertheless, its footprint is the same size as the conventional product, achieving compactness. The following covers the specific means used to achieve this.

MOLTRAs with capacities exceeding 1,000 kVA generally employ a three-leg stacked iron core as shown in Fig. 6(a), but this time, we focused on a five-leg iron core to reduce the height dimension. Figure 6 shows the magnetic flux in the iron core represented by arrows and vector diagrams.

The five-leg stacked core has a structure in which the iron core (return leg) is also placed outside of the coils (U phase, W phase) as shown in Fig. 6(b). On the other hand, the five-leg wound core consists of four wound cores arranged in a row, with the cores insulated by a surface coating, as shown in Fig. 6(c). Although they have different structures, they share the same magnetic flux vector diagram and have the same magnetic flux distribution.

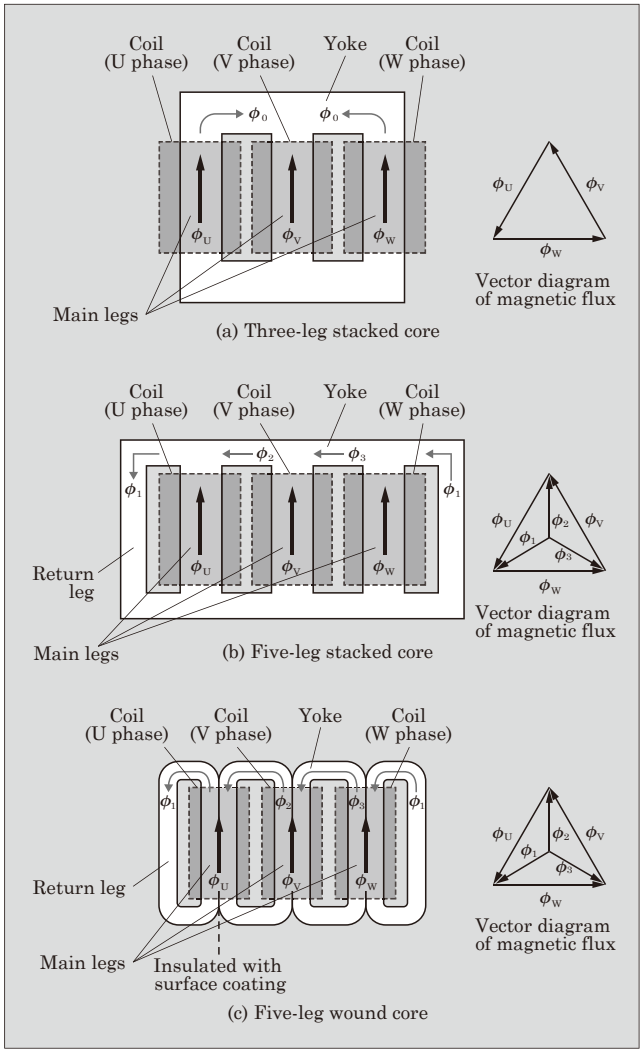

Fig.6 Structures of the three-leg iron core and the five-leg iron core

The amount of magnetic flux flowing in the main legs and yoke of a three-leg stacked iron core is all uniform, and the relationship between them is expressed by Equation (1).

$$|\overrightarrow{\phi_0}| = |\overrightarrow{\phi_U}| = |\overrightarrow{\phi_V}| = |\overrightarrow{\phi_W}| \quad \cdots\cdots (1)$$

ϕ_U, ϕ_V, ϕ_W: Magnetic flux in the main legs (Wb)
ϕ_0: Magnetic flux in the yoke (Wb)

On the other hand, in the five-leg stacked core and the five-leg wound core, the magnetic flux flows into the return leg; therefore, as shown in the vector diagrams in Figs. 6(b) and 6(c), the magnetic flux flowing into the yoke and return leg is smaller than the main legs. The relationship of the magnetic flux between the main legs, yoke, and return leg varies depending on the differences in their magnetic resistance, but assuming that the levels of the magnetic resistance are the same, it is represented by Equation (2).

$$|\overrightarrow{\phi_1}| = |\overrightarrow{\phi_2}| = |\overrightarrow{\phi_3}| = \frac{1}{\sqrt{3}}|\overrightarrow{\phi_U}| = \frac{1}{\sqrt{3}}|\overrightarrow{\phi_V}| = \frac{1}{\sqrt{3}}|\overrightarrow{\phi_W}| \quad \cdots\cdots (2)$$

ϕ_U, ϕ_V, ϕ_W: Magnetic flux in the main legs (Wb)
ϕ_1, ϕ_2, ϕ_3: Magnetic flux in the yoke and return leg (Wb)

Calculations for the magnetic flux density in the main legs B_1 (T) and the magnetic flux density in the yoke and return leg B_2 are represented by Equations (3) and (4). The space factors are assumed to be equal.

$$\overrightarrow{B_1} = \frac{\overrightarrow{\phi}}{S_1 \times \text{Space factor}} \quad \cdots\cdots (3)$$

$$\overrightarrow{B_2} = \frac{\overrightarrow{\phi}}{S_2 \times \text{Space factor}} \quad \cdots\cdots (4)$$

B_1: Magnetic flux density in the main legs (T)
B_2: Magnetic flux density in the yoke and return leg (T)
S_1: Core section area of the main leg (m^2)
S_2: Core section area of the yoke and return leg (m^2)

When uniformly designing magnetic flux density for the main legs and yoke, the cross-sectional area of the main legs and yoke should be the same for a three-leg stacked iron core. Meanwhile, to uniformly design the magnetic flux density in the main legs, yoke and return leg in the five-leg stacked iron core and five-leg wound iron core, the cross-sectional area of the yoke and return leg should be $1/\sqrt{3}$ times that of the main leg according to Equations (3) and (4), as the amount of magnetic flux in the yoke and return leg is $1/\sqrt{3}$ times

that of the main leg according to Equation (2). Therefore, for the five-leg stacked iron core and the five-leg wound iron core, the height of the yoke can be reduced in comparison to the three-leg stacked iron core, enabling height reduction of the MOLTRA.

As described above, we found that it is possible to lower the height of the MOLTRA by applying these five-leg cores. On the other hand, because the core is also located outside of the coil, the five-leg stacked iron core in particular has the disadvantage of a larger width than the three-leg stacked iron core, as shown in Fig. 6(b).

Consequently, the V-ECO MOLTRA uses a five-leg wound iron core with four wound iron cores arranged side by side as shown in Fig. 6(c), as well as a rectangular coil shape. Compared to round coils, rectangular coils have a larger depth but smaller width as shown in Fig. 7(a). This is because a width increase seen in the five-leg stacked iron core in Fig. 6(b) can be suppressed to enable a compact design. In addition, there is the advantage of easier manufacturing than the five-leg stacked iron core.

However, rectangular-shaped low-voltage coils tend to have air gaps between conductors in the width direction, as shown in Fig. 8. Without solving this issue, the impact of reducing the width is small. Furthermore, these air gaps inhibit heat transfer by thermal conduction within the winding, thereby reducing the heat dissipation performance of the coil. We thus applied compressive force in the direction of the arrows using the dedicated jig to the width direction of the low-voltage coil as shown in Fig. 8 to suppress the generation of air gaps between conductors. As a result, we reduced the width of the low-voltage coil and achieved, as shown in Fig. 9(a), the five-leg wound iron core that has a width equivalent to that of the three-leg stacked iron core.

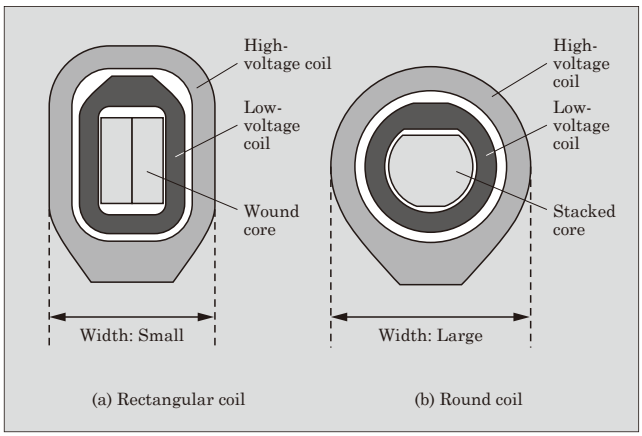

Fig.7 Cross-sectional views of coil parts

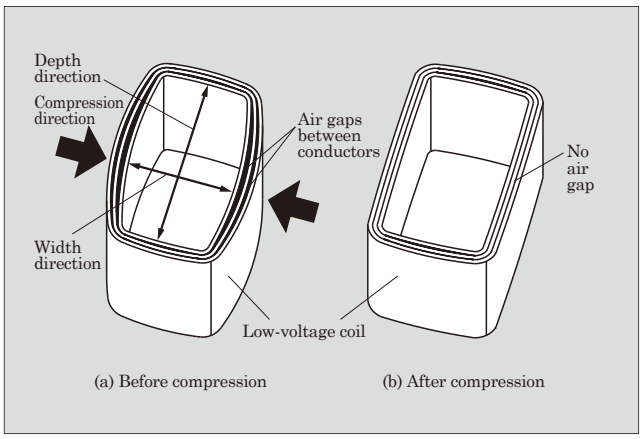

Fig.8 Compression of low-voltage coils (simple drawings)

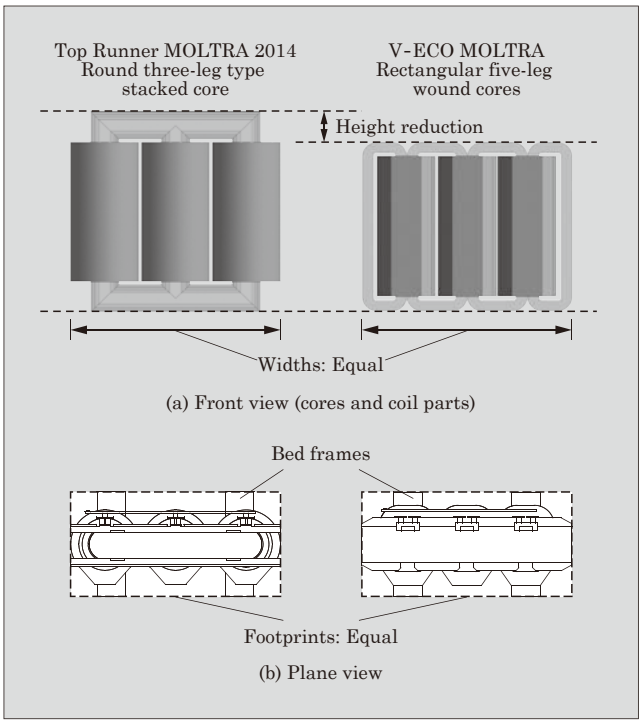

Fig.9 Comparison between MOLTRA external dimensions

As shown in Fig. 9(b), the depth of the MOLTRA is maximum at the bed frame. The bed frame is used to mount the MOLTRA to the switchboard and for fall prevention. Although the five-leg wound iron core structure has a greater mass than the three-leg stacked iron core structure because of the longer magnetic path length, its lower height of the center of gravity reduces the moment acting on the bed frame mounting bolts and other parts during vibrations, such as those caused by earthquakes. As a result, it can be stably installed with a bed frame of the same size as the conventional Top Runner MOLTRA 2014, which has a three-leg stacked iron core structure, maintaining same footprint as that of the existing product.

The outer side in the width direction of the five-leg wound iron core is the non-charging section (iron core), and the insulation distance (separation distance) from the side of the switchboard can be kept short compared with the conventional three-leg stacked iron core, of which the outer side is the charging section (high voltage coil). As a result, the footprint is equivalent to that of the conventional model, but the width of the

board that houses the MOLTRA has been reduced.

3.2 Optimization of design

The newly developed V-ECO MOLTRA has comparable energy-saving performance to the Top Runner MOLTRA 2014 that exceeds 1,000 kVA. The following describes the optimization of the design and the energy-saving performance of the five-leg wound core.

In the five-leg stacked iron core, electromagnetic steel sheets stacked for each of the main leg, return leg, and yoke are integrated to form the core as shown in Fig. 6(b). Thus, the cross-sectional area of the main leg, return leg, and yoke can be adjusted by changing the width dimension of the electromagnetic steel sheet in the main leg and return leg and the height dimension of the electromagnetic steel plate in the yoke, respectively. Therefore, the cross-sectional area of the yoke and return leg can easily be made $1/\sqrt{3}$ that of the main leg.

On the other hand, the five-leg wound iron core uses four wound iron cores arranged in a row, with each core made of electromagnetic steel plates stacked in a spiral shape as shown in Fig. 6(c). The cross-sectional area of each wound core is the same at any portion, and therefore, the section area of the main leg is equivalent to that of two wound cores. As a result, the section area of the yoke and return leg is half that of the main leg, and the height can be further reduced compared with the five-leg stacked iron core. On the other hand, the yoke and return leg of the five-leg wound iron core have a magnetic flux of $1/\sqrt{3}$ times that of the main leg and a cross-sectional area that is half that of the main leg, and therefore the magnetic flux density is $2/\sqrt{3}$ times that of the main leg according to Equations (3) and (4). Thus, taking into account the fact that the magnetic flux density in the yoke and return leg is larger than that of the main legs, we designed the magnetic flux density in the main legs to be relatively low so that the iron core would not saturate and impair transformer function. In addition to the magnetic flux density reduction, we employed low-loss iron core because the five-leg wound iron core has higher power loss than that of the three-leg stacked iron core resulting from its larger mass.

These design optimization has enabled to maintain the same energy consumption efficiency as the Top Runner MOLTRA 2014 (40% higher energy consumption efficiency than the 1990 s model).

3.3 Other features

In addition to the increased energy performance and size reduction, the V-ECO MOLTRA has the following features.

(a) Significant noise reduction (−10 dB) compared with the 1990 s model
(b) High flame retardancy and type certified according to IEC 60076-11
(c) High insulation reliability due to suppression of partial discharge by applying molded windings cast in a vacuum environment

4. Postscript

This paper described the rectangular large-capacity 5-leg type MOLTRA, which was designed in response to the need for better energy performance and size reduction.

Going forward, we will continue to try to understand customer needs in order to develop the optimal MOLTRA products.

References

(1) Yasumoto, K. et al. “Common Backup Systems for Data Centers with Large-Capacity UPS. FUJI ELECTRIC REVIEW. 2020, vol.66, no.1, p.72-78.

Electric Power Management System Contributing to Safe and Stable Railway Transportation

UEKUSA, Hideaki* YAMACHI, Toshifumi* SHIRAKURA, Yoshizumi*

ABSTRACT

The electric power management system centrally manages the power system to feed power from railway substations and sectioning posts to trains and railroad stations. In addition to stable, continuous power supply, it is required to deliver the functions to improve the efficiency of the operation and maintenance of the power system including railway substations. Fuji Electric offers the electric power management system that meets these needs to enhance functionality such as failure recovery, improve screen visibility, and streamline the system configuration, contributing to safe and stable railway transportation.

1. Introduction

Railways are a highly public mode of transportation, and delays and cancellations of trains have a significant social impact. Accordingly, railway substations and sectioning posts play an important role in the continuous supply of stable power. In addition, the need for efficient power system operation and maintenance of substations has recently been increasing. Electric power management systems are very important systems that assume these roles.

This paper describes a power management system that contributes to safe and stable railway transportation and is capable of enhanced functionality to improve the operational stability of the system and the efficiency of recovery processes at substations.

2. Overview and Issues of Power Management Systems

For electric railways, substations generally receive electric power from electric power companies, perform step-down and rectification, and feed the power to trains and stations. The power system configuration for supplying power to electrical train lines is composed of local control centers, such as substations and sectioning posts set up along railway lines, which section the power supply in the event of an accident or during maintenance work. Therefore, the Ministerial Ordinance to Provide the Technical Standard on Railways (Article 49 Paragraph 4) states: "Monitored substations (meaning automated, remotely controlled and monitored substations, and portable substations without stationary operators) and switching stations shall be provided with a control post with the surveillance and control equipment, and shall be able to deal with any accident, disaster and failure."

A power management system for electric railways comprehensively carries out these electric power dispatching operations in a centralized location, such as a dispatching center.

2.1 Conventional system configuration

This system consists of console processors, a central processor and a remote control master station equipment installed in a control center (control room and equipment room) and remote control slave station equipment installed in local control centers, such as substations and sectioning posts. Figure 1 shows an example of a system configuration that uses an Internet Protocol (IP) network.

A remote control slave station equipment collects information about the substation and other equipment and operation conditions and transmits the information to the remote control master station equipment via a remote control line. Computers of the central processor and console processors work together to process and record the information and display it on consoles.

Operators in the control room monitor the power system based on the displayed information and use consoles as required to issue operation and equipment switching control commands to the substation. Based on these commands transmitted to remote control slave station equipment via remote control lines, the substation equipment is activated.

While High-Level Data Link Control (HDLC) protocol communication using metal lines was the mainstream for remote control lines, TCP/IP communication and PMCN*[1] communication have also become available in tandem with the popularization of IP net-

* Power Electronics Energy Business Group, Fuji Electric Co., Ltd.

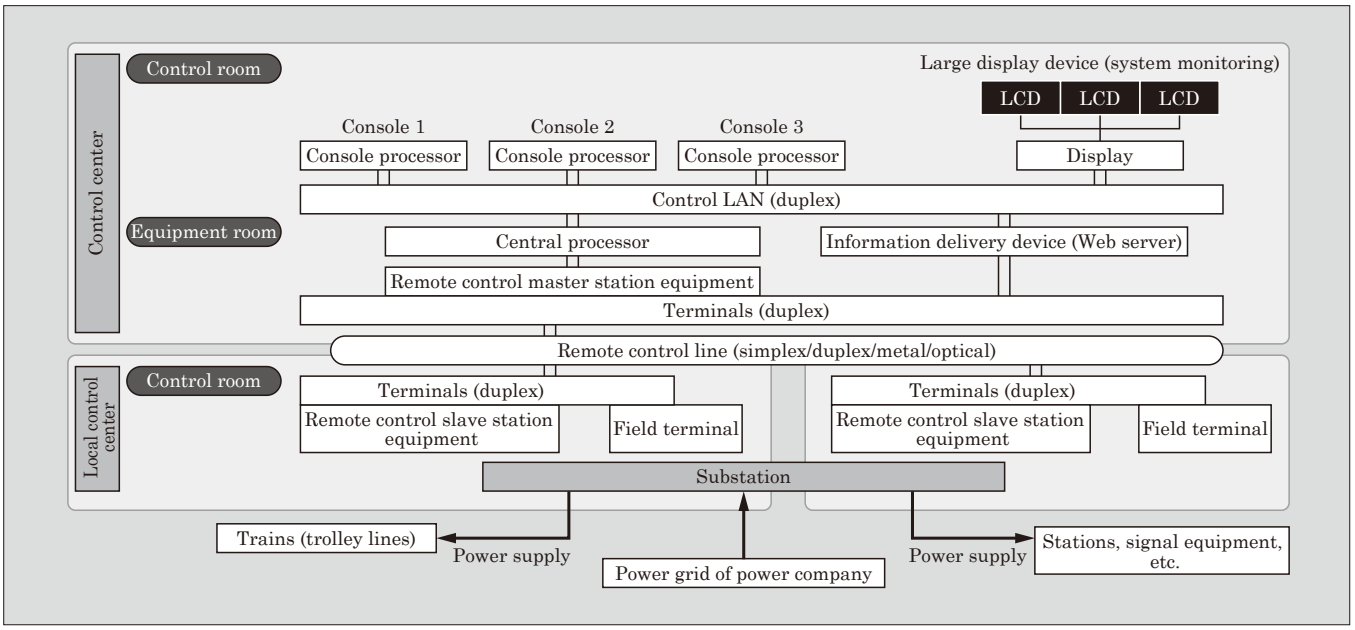

Fig.1 Example of system configuration using an IP network

works.

When configured with multiple central processing units to provide redundancy, the system is operated as a main system, a secondary system, and a standby (stopped) system, respectively. When an error occurs in the main system, the secondary system is automatically switched to the main system and operation is continued.

2.2 Overview of functions of conventional systems

Power management systems consist of essential basic functions as well as extended functions that can be selected according to customer needs.

2.2.1 Basic functions

(1) System monitoring function

(a) Displays the operation status and measurement information of substations on the system screen (screen showing a diagram of the power system) of a console.

(b) When a failure occurs, an alarm sounds and information such as the system screen of the relevant substation is displayed on a console.

(c) Displays graphical representations of the electric energy of substations on a 30-minute scale (demand monitoring). Sounds a demand alarm when the actual value exceeds the warning value or contract value.

(d) Displays sticky notes on the system screen. They can be used to transfer monitoring operations between shift operators.

(2) System control function

(a) Turns the power on and off and switches between modes of the substation equipment via operation of the system screen of a console to control the power.

(b) In normal operation, automatic operation that realizes the equipment switching pattern set (registered) in advance is enabled.

(c) When an emergency occurs in a substation or a route, an emergency stop command and feeding stop command are output from a console to the substation.

(3) Recording function

(a) Records and stores state changes, failures, operation information and automatic control operation status of the substation equipment.

(b) Collects the electric energy, voltage and current data of each substation and maintains and stores these data in the form of daily, monthly, and annual reports.

(c) The measurement data are not only displayed as trend graphs on the console, but this graphical data can also be extracted and utilized.

(4) System management function

(a) Regularly checks the state of component devices of the power management system and informs an operator of any abnormalities detected, such as failures.

(b) When an abnormality occurs in the central processor, it automatically switches between the main and secondary systems.

2.2.2 Extended Functions

Extended functions are functions that can be selected according to customer needs. They include failure response automation and maintenance efficiency improvement. Functions are extended by adding equipment or changing the programs of the console

*1 PMCN (Protocol for Mission Critical industrial Network use): An industrial mission critical network protocol of a Japan Electrical Manufacturers' Association (JEMA) standard (established in October 2005).

and the central processor.

(1) Large screen display function

Displays information about the entire power system on a large display device in the control room to facilitate the visualization and sharing of information.

(2) Interlinked breaking device backup control function

In the event of an accident involving the DC feeder, a protection relay and interlinked breaking device installed in the substation are instantaneously activated to stop feeding in the same feeding section as the feeder in which the accident occurred. In addition, in preparation for failure of the interlinked breaking device, the central processor outputs an opening command to the same feeder breaker to more reliably stop feeding.

(3) Failure recovery function

Judges a failure based on the information about state changes such as activation of a protection relay or tripping of a breaker at the substation, and the following automatic control is performed by the central processing unit as a recovery process in response to the failure.

- ○ Power receiving system switching control (substation with two-line power receiving system)
- ○ High-voltage distribution automatic switching control
- ○ Feeder re-closing control
- ○ Rectifier re-closing control
- ○ Rectifier transfer control

(4) Information delivery function

Distributes power system information to substations and field devices of the maintenance department connected to the network and displays the information.

(5) Work planning, management, and control function

When planning work schedules for operations such as power receiving and high-voltage distribution system switching and maintenance, and if the work involves power interruption, the procedure (control details) can be registered in advance to enable automatic control of the equipment according to the details. Power interruption and accidents due to operational errors can be avoided.

In addition, the operation of pushbuttons of a telephone from the site by a maintenance worker allows the work progress status, such as arrival on site and start and completion of work, to be displayed on the console. The work progress can be shared by the site and the control room, which is effective for preventing accidents involving workers caused by errors in operation timing.

(6) Simulation function

Allows scenarios for abnormality response training of operators to be created based on the records of responses and recovery operations performed when actual accidents occurred. In addition, simulations can be run for operation training of the system and prior confirmation of the planned control operation.

2.3 Issues with conventional system

2.3.1 Simplification of software management and updates

In the conventional system, the relationship between a console processor and the central processor is based on the client-server model, with a control system package group*2 and a power management function software*3 distributed in each. While this allows a stable system to be constructed, the division of functions between the two is unclear and any system remodeling intended to improve functions requires dealing with both the client and the server. Not only are these tasks time-consuming, but software management and updating were complicated.

2.3.2 Data display and management level enhancement

In recent years, the need for data display that combines images, videos, audio and other information has been increasing. Accordingly, there is a demand for enhanced data display that enables the system status and the presence of abnormalities to be accurately grasped visually and aurally.

In addition, as automated offices become widespread, there has been an increasing need to digitize forms (operation information of substations) for long-term storage and to print and refer to these digitized forms. There is also demand for an enhanced data management level, such as by providing the ability to link data to general-purpose software such as Excel*4.

2.3.3 Making systems more compact

The conventional system required an information delivery device to distribute field power system information and an alarm device issue alarms when emergencies occur. At the same time, customer needs have diversified, leading to demand for simple systems and remote response. Given these circumstances, there is a need to make the entire system, including the ancillary facilities, more compact.

3. Features of the New System

3.1 Simplification of software management and updates

The power management function software of the new system is based on the Model-View-Controller (MVC) model. The MVC model divides software into model, view, and controller roles, and its clear division of functions makes it easy to develop new software and customize it. Figure 2 shows the software models of the conventional system and the new system.

In the new system, which uses this MVC model, system modifications for the purpose of function im-

*2 The monitoring and control system package: PFILE, FSINET, ROSE and fenster, provided by Fuji Electric.

*3 Power management function software: Application software that achieves the various functions of a power management system.

*4 Excel is a trademark or registered trade mark of Microsoft Corporation.

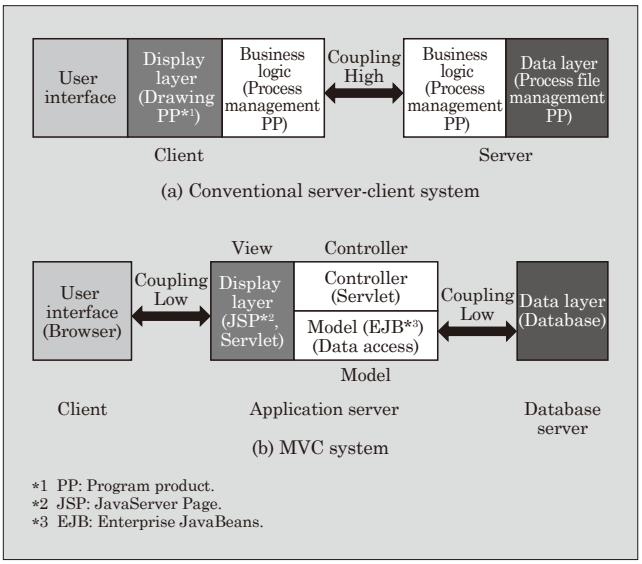

Fig.2 Software models of the conventional system and the new system

provement are performed only on the application server. This eliminates the need for management of the client software, facilitating the updating work.

3.2 Data display and management level enhancement

For the software of the new system, we have used the Java*5 platform to accommodate any OS. In addition, the system has been designed to consolidate data into managed databases (DBs) and synchronize the distributed DBs through replication to improve data operability.

Figure 3 shows the software configurations of the conventional system and the new system.

The new system can run in both Windows*6 and Linux*7 environments. It is now possible to combine Linux for the server with an emphasis on reliability, and Windows for the console with an emphasis on display for operators and on operation.

In the screen shown on the console (Web screen), information is updated in units of components and displayed in real time (every 1 to 2 seconds). In addition to the use of color changes and flickering to indicate abnormal conditions, it is also possible to display animations and pop-up camera images of faulty substation locations on the grid screen. Restrictions on the background color of the system screen and the size and color of symbols have been eliminated to improve visibility.

Daily, weekly, and monthly reports can now be

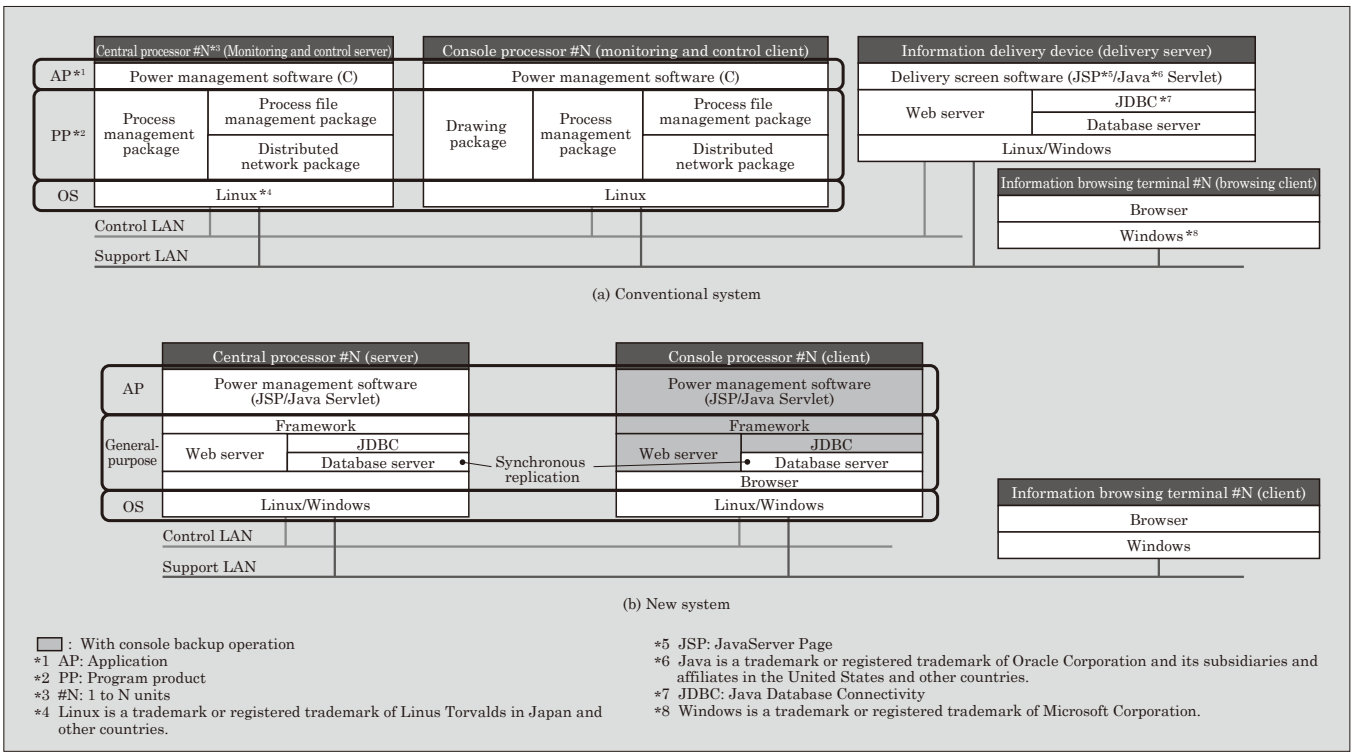

Fig.3 Software configurations of the conventional system and the new system

*5 Java is a trademark or registered trademark of Oracle Corporation and its subsidiaries and affiliates in the United States and other countries.

*6 Windows is a trademark or registered trademark of Microsoft Corporation.

*7 Linux is a trademark or registered trademark of Linus Torvalds in Japan and other countries.

previewed as PDF files, and integration with Excel has expanded the versatility of data utilization.

3.3 Making systems more compact

The new system employs Web service-based centralized management, which eliminates the need for a dedicated information delivery device to distribute information such as system status. Consideration is also given to information security as access to the delivery screen can be restricted through the use of permissions.

It is also possible to build the console processor and the central processor on a single piece of hardware. In addition, WAV files can be used for alarm sounds, and no external alarm device is necessary. As a result of these changes, the entire system has become more compact.

Based on these features of the new system, Fuji Electric has further implemented functions that meet the requirements of individual power management systems. Chapter 4 presents the power management systems of the Tobu Tojo Line and the Tobu Ogose Line of Tobu Railway Co., Ltd. and the Minatomirai Line of Yokohama Minatomirai Railway Company as examples of the introduction of these power management systems.

4. Introduction Examples and Features of Power Management System

4.1 Tobu Railway Tojo Line power management system

The power management system of the Tojo Line is responsible for remote centralized monitoring and control at 17 locations, including 15 substations and 2 sectioning posts between Ikebukuro Station and Yorii Station on the Tobu Tojo Line and between Sakado Station and Ogose Station on the Tobu Ogose Line.

Fig.4 Tojo Line electric control room

Figure 4 shows the appearance of the Tojo Line electric control room and Fig. 5 the configuration of the Tojo Line power management system.

In addition to the basic functions and extended functions described in Section 2.2, this system has the following features.

4.1.1 Strengthened measures against abnormal situations and improved system robustness

The configuration includes three consoles. There are three main computers (control servers). In addition to two control servers, a control server and a monitor device have been provided away from the Tobu Tojo Line and the Tobu Ogose Line. By enabling each control server to play any role, whether it be the main system, secondary system or the standby (stopped) system, they can monitor the operational status of the

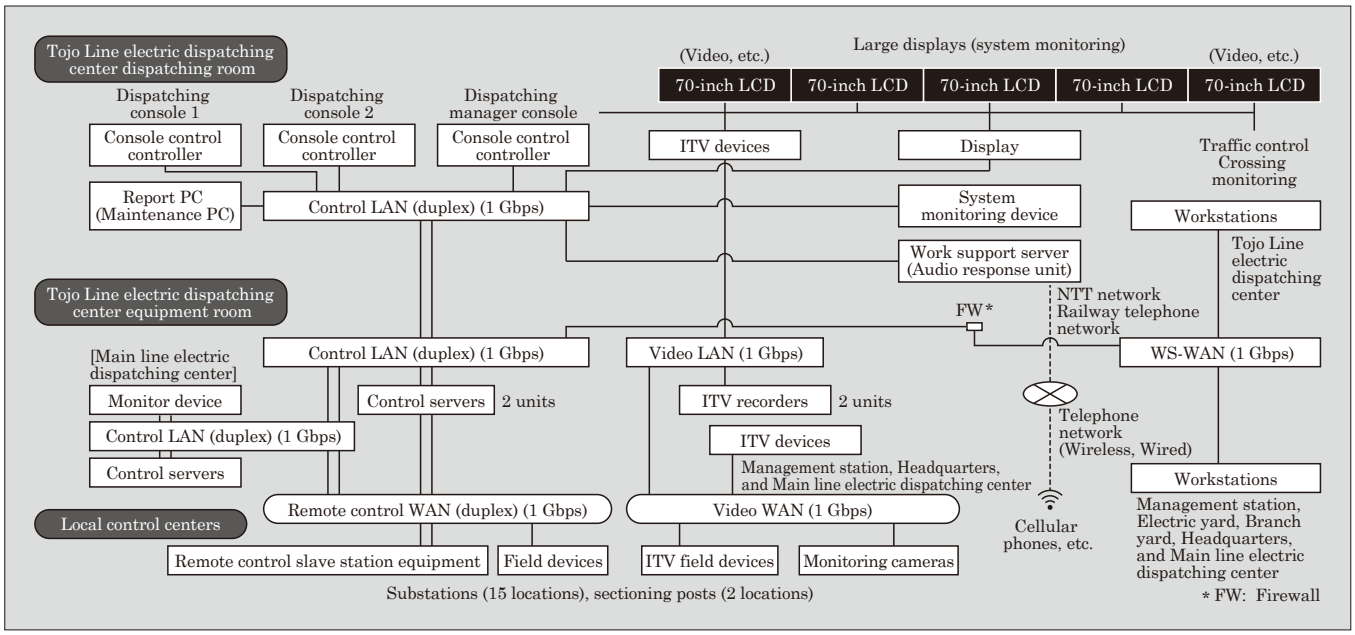

Fig.5 Tojo Line power management system configuration

Tojo Line substation even when the Tojo Line electric dispatching center is disabled due to a disaster or other reasons.

4.1.2 High-speed transmission and improved reliability

The remote control line is a single-loop duplex optical line and, by using the TCP/IP communication system, the number of remote monitoring and control master stations (telemeter control masters, or TCMs) has been reduced. The communication devices connected in a ring are equipped with a loopback function (bypass function) used in the event of an abnormality, which provides a higher-reliability remote control line than simple line duplexing.

4.1.3 Video monitoring

The status inside and outside the substations can be monitored through camera images with monitoring devices at the Tojo Line electric dispatching center control room and the maintenance department. Images are constantly video-recorded and can be traced back up to a week. In the Tojo Line electric dispatching center control room, the images can be displayed on a large display device and, when a fire or an intrusion by an outsider is detected, images of the relevant substation are automatically displayed. It is also possible to turn and zoom the camera and make alert announcements from the microphone of the dispatching console.

4.1.4 Fault current waveform display

Current waveform data observed when a feeder current fault occurs can be collected from the feeder fault selector of local control centers and displayed on a console.

4.2 Yokohama Minatomirai Railway Minatomirai Line power management system

The power management system of the Minatomirai Line of Yokohama Minatomirai Railway carries out monitoring and control of two substations, one switching station and six distributing stations between Yokohama Station and Motomachi-Chukagai Station. Figure 6 shows the configuration of the power management system of the Yokohama Minatomirai Railway Minatomirai Line. The system has the basic functions and failure recovery, information delivery and simulation functions described in Section 2.2. It also has the following features.

4.2.1 Ensured operational continuity during failure due to redundancy of facilities

Two control consoles are installed at the power monitoring station, both with the same configuration. When one fails, the other is used to ensure operational continuity. Aside from the power monitoring station, two monitoring consoles are installed in the power management equipment room and one maintenance console in the headquarters.

4.2.2 Emergency power distribution function during interruption of power reception

The two substations have generator equipment in case an interruption of power reception occurs. The power management system, which is equipped with an emergency power distribution function that controls the generator equipment and applies load restrictions to the power distributing stations under its control, automatically applies load restrictions to the power distributing stations in response to the power interruption status in order to control power distribution from the power generation equipment.

4.2.3 Improved recognizability of power distribution status

The power management system receives the train running position information from the operation management system, and the train position is superimposed over the overall system diagram. Figure 7 shows a sample screen of the overall system diagram.

4.2.4 Reducing the footprint of the remote control slave station equipment and switching panel

Due to the space constraints of the equipment room in which to install the remote control slave station equipment, the remote control slave station equipment is stacked on the switching panel required for switching between the old and the new systems. Fig-

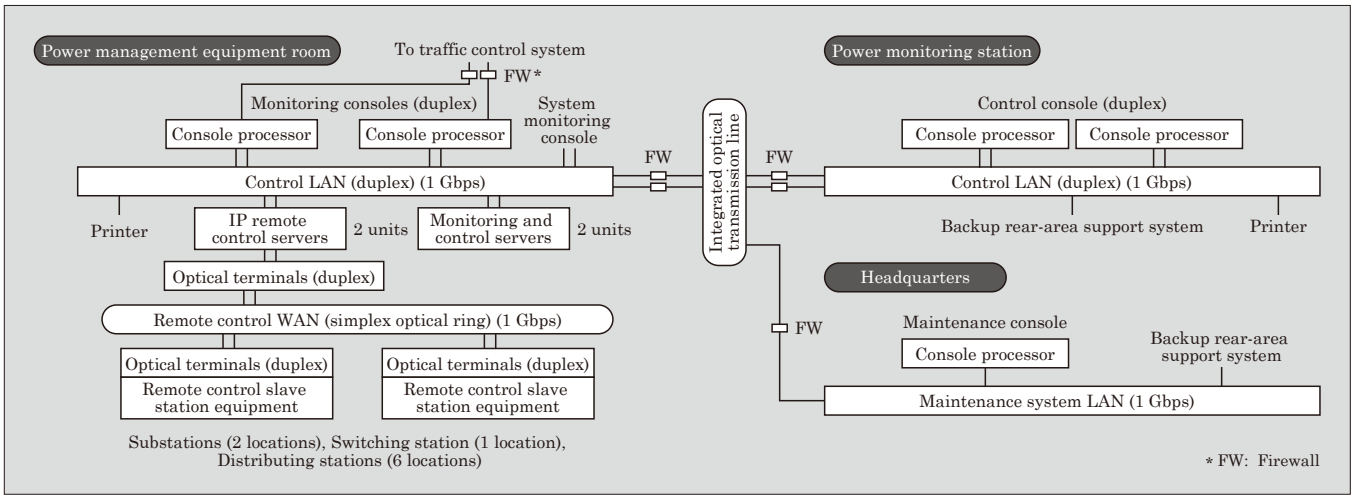

Fig.6 Yokohama Minatomirai Railway Minatomirai Line power management system configuration

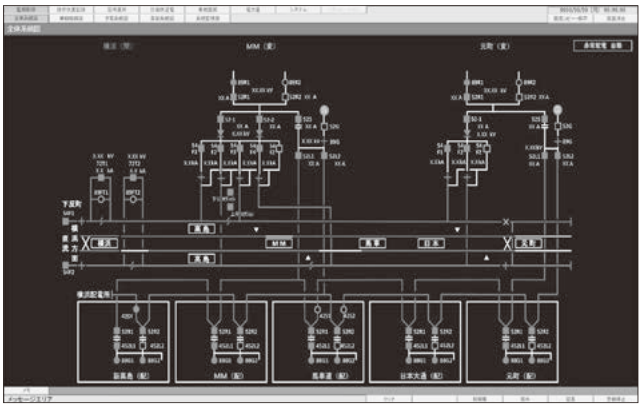

Fig.7 Screen example of an entire systems diagram

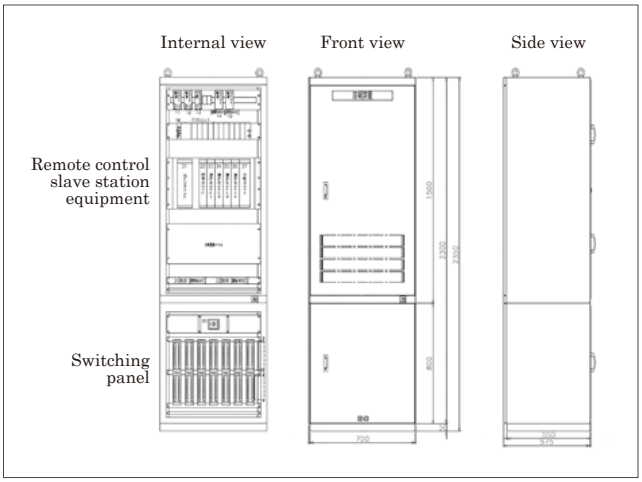

Fig.8 Remote control slave station and switching panel (outline drawing)

ure 8 shows the external appearance of these devices. If the switching panel is installed at the site first, the on-site work can be accelerated. We have adopted a structure with the switching panel separated from the remote control slave station equipment to allow the switching panel to be used for the upcoming system switching work.

5. Postscript

This paper has described a power management system that contributes to safe and stable railway transportation.

In addition to efficient operation, future power management systems will require labor-saving for inspection operations, management level enhancement through computerization of form management, detection of signs of failure in substation equipment, security measures for critical infrastructure, and other extended functions.

Fuji Electric intends to contribute to safe and stable railway transportation by developing a deterioration diagnosis function using multivariate analysis technology and implementing security measures in accordance with the guidelines of the Ministry of Land, Infrastructure, Transport and Tourism.

Finally, we would like to express our heartfelt gratitude to all those who have provided guidance on the implementation of updated systems.

Industrial-Use Power Supplies Contributing to Stable Operation of Material Manufacturing Equipment

WATABE, Kohei* OKAZAKI, Yohei* ASADA, Masato*

ABSTRACT

Various types of industrial power supplies are used in material manufacturing equipment depending on the application. Among them, transformer rectifiers for aluminum smelting have large capacities more than several hundred MVA per unit, posing specific issues. To address the issues, Fuji Electric has adopted an optimum design based on various simulations and harmonic system analyses. As a result, we have downsized the transformer rectifier and improved its reliability by increasing analysis accuracy and optimized materials, confirmed the safety in an accident by simulating the short-circuit fault in the rectifier, and prevented power quality deterioration in the entire power supply system by analyzing the harmonics generated from the transformer rectifier.

1. Introduction

Depending on the application, various types of industrial-use power supplies such as transformer rectifiers (DC power supplies), AC power regulators, special waveform power supplies, high-frequency power supplies, flicker compensators and static var compensators are used in material manufacturing equipment for nonferrous metals, steel, chemicals, semiconductors, and green hydrogen.

Industrial-use transformer rectifiers are used for the power supplies of the equipment for material manufacturing processes, such as electrolysis, melting, smelting and heating. The material manufacturing industry is the foundation of all industries. Investment in equipment continues to expand worldwide, and the market for industrial-use transformer rectifiers is also expanding.

Transformer rectifiers for aluminum smelting are one such equipment with large capacities exceeding several hundred MVA, and therefore, they are accompanied by a number of challenges to be addressed, including the implementation of countermeasures against harmonics, size reduction, and ensuring safety in the event of an accident. Fuji Electric is making efforts to overcome these challenges by optimizing the design of equipment using simulation analysis technology, including verification not only of the transformer rectifier units as standalone devices, but also of power supply systems as a whole.

This paper describes industrial-use power supplies that contribute to the stable operation of material manufacturing equipment.

* Power Electronics Energy Business Group, Fuji Electric Co., Ltd.

2. Overview of Transformer Rectifiers

Transformer rectifiers convert high-voltage and extra-high-voltage AC power to low-voltage, high-current DC power. It is used for smelting processes for various metals and electrolytic processes at chemical plants.

For 60 years, Fuji Electric has provided industrial-use transformer rectifiers of a wide range of capacities to customers around the globe. The development, installation and construction of transformer rectifiers require high-current application technologies (local heating suppression and magnetic flux control) as well as the optimization and high-reliability design of systems with consideration for impact on the grid, and Fuji Electric has the advanced technological capabilities to meet these requirements.

Figure 1 shows a bird's-eye view of a transformer rectifier for aluminum smelting equipment.

As aluminum electrolysis is a molten salt electrolysis procedure, the disconnections of a DC power

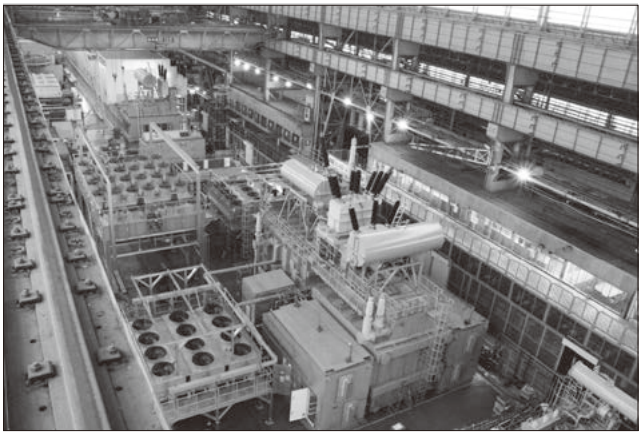

Fig.1 Transformer rectifier for aluminum smelting equipment

source causes the solidification of molten aluminum and significantly damages the electrolytic equipment; therefore, DC current losses of one hour or longer must be avoided. For this reason, rectifiers generally employ diodes because of relatively high reliability. In some cases, multiple rectifiers are installed for redundancy to prepare for failures.

Figure 2 shows a skeleton diagram of typical aluminum smelting equipment. The voltage regulating transformer steps down extra-high-voltage AC power and the transformers for the rectifiers and the rectifiers feed DC power to electrolytic equipment. Harmonic filters are installed to improve power factor and reduce harmonics flowing to the power supply, increasing power quality.

Anode effect (AE) that occurs during molten salt electrolysis temporarily increase the load resistance during operation. To compensate for this and enable operation at a constant current, an on-load tap changer for coarse control of DC voltage (built into the voltage regulating transformer) and a voltage control reactor (VCR) for fine control are installed in the transformer rectifier.

As indicated in Table 1, the electrical specifications required for the electrolytic equipment are increasing year by year, and in turn, transformer rectifier capacities have also been continuously increasing. Increasing capacities have brought about the need to address challenges in the following ways:

○ Implementing countermeasures against harmonics to prevent power supply quality loss
○ Reducing the size (small footprint)
○ Improving design reliability for higher voltages and higher currents
○ Ensuring safety

Following chapter describes Fuji Electric's efforts to solve these issues for transformers, rectifiers, and power supply systems as a whole.

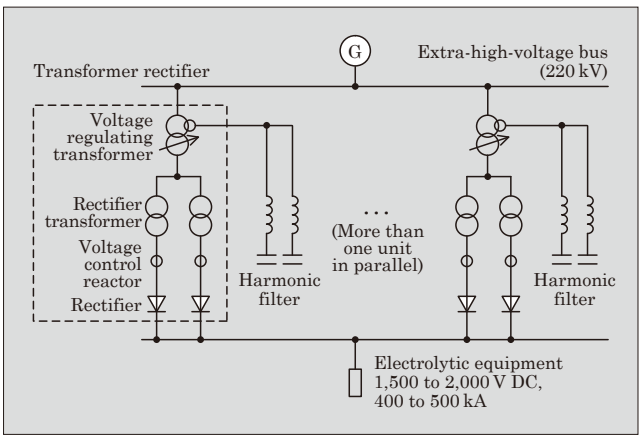

Fig.2 Skeleton diagram of general aluminum smelting equipment

Table 1 Required electric specifications of aluminum smelting equipment

	1960's	1990's	From 2010 to now
DC voltage	500 V	1,250 to 1,600 V	1,800 to 2,000 V
DC current	50 to 120 kA	310 to 370 kA	400 to 500 kA
DC power	25 to 60 MW	350 to 500 MW	700 to 900 MW

3. Efforts for Transformers

3.1 Suppressing impedance fluctuation through changes in winding arrangement

Voltage regulating transformers of transformer rectifiers for aluminum refining equipment are required to continuously control DC voltage from 0 V to the rated voltage (2,000 V maximum). They thus often use a 107-tap multi-varying on-load tap changer (OLTC).

When the tap position changes, the impedance fluctuates, causing power supply quality loss. Impedance fluctuations are particularly large where the coarse tap position changes. For this reason, the latest equipment uses a structure in which the primary and secondary winding are reversed compared to the conventional winding arrangement. Figure 3 is an example of the change in impedance between the primary winding and secondary winding. It shows that the impedance fluctuation is smaller after the change in winding arrangement.

When the impedance fluctuation decreases, the fluctuation of the reactive power, which is obtained by the product of the impedance and current, is also reduced, thereby improving system stability. In addition to this effect of preventing power supply quality loss, the stress on the current limiting resistance value of OLTCs is reduced, and for this reason, the measure helps improve the reliability of OLTCs.

3.2 Downsizing of equipment

As mentioned above, voltage regulating transformers often use 107-tap OLTCs. To achieve a107-tap configuration, conventional OLTCs used wire connection with 6 section coarse taps and 18 section fine taps.

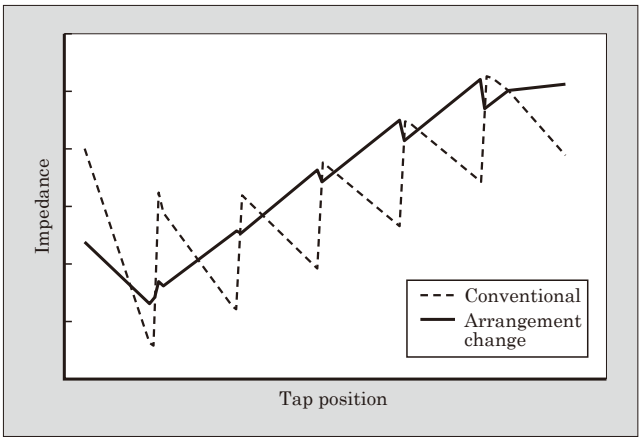

Fig.3 Example of change in impedance between primary winding and secondary winding

For the latest equipment, we have changed the fine taps from the upthrust method (method to add voltage to the coarse taps) to the hanging method (method to subtract voltage from the coarse taps) to obtain a wire connection of five section coarse taps, reducing the product size. This measure has reduced the size of the transformer to 88% that of the conventional product.

Figure 4 shows a skeleton diagram of the latest voltage regulating transformer, and Fig. 5 is a comparison between the tap structures.

3.3 Highly reliable design (Prevention of dielectric breakdown)

The receiving voltage of aluminum smelting equipment in recent years is generally approximately 220 kV, which is the highest voltage class for industrial-use transformers. For this reason, the intermediate voltage is also high. Figure 4 shows the skeleton diagram of the voltage regulating transformer. Its secondary winding consists of more than one coarse tap and one fine tap to form 107 taps, and has greater number of terminals than typical transformers. Therefore, to prevent dielectric breakdown in the secondary winding, the insulation design must be based on the accurate voltage oscillation and electric field distribution at each terminal as well as the terminals with voltage to be applied. The following are typical analysis examples:

(1) Voltage oscillation analysis

We used self-developed program based on an voltage oscillation analysis to estimate the transfer voltage and voltage distribution at each terminal of the secondary winding when 220 kV was applied to the primary winding (1U, 1V, 1W) and the voltage distribution at each terminal of the secondary winding when it was applied to the secondary winding (2U). As an example, Fig. 6 shows an example estimate of the voltage distribution. Figure 6 shows the applied waveform between the 2U terminal and GND when applied to the secondary winding (2U) and the voltage generated between the A23 terminal and GND, calculated by applying certain insulation design conditions. The voltage generated between the A23 terminal and GND is below 100% for all time periods. From this, we can determine that no dielectric breakdown was caused due to the application, and that the applied insulation design conditions are effective. From such analysis, the insulating distance and insulating paper thickness required for the secondary winding and terminal have been ensured to prevent dielectric breakdown.

We measured the voltage distribution when the manufacturing was completed and confirmed that the analysis results and actual measured values were almost the same.

(2) Electric field analysis

By entering the voltage at each terminal based on the analysis results above into the self-developed program for finite element method, we simulated the electric field distribution and strength at each winding part. Figure 7 shows an example of electric field

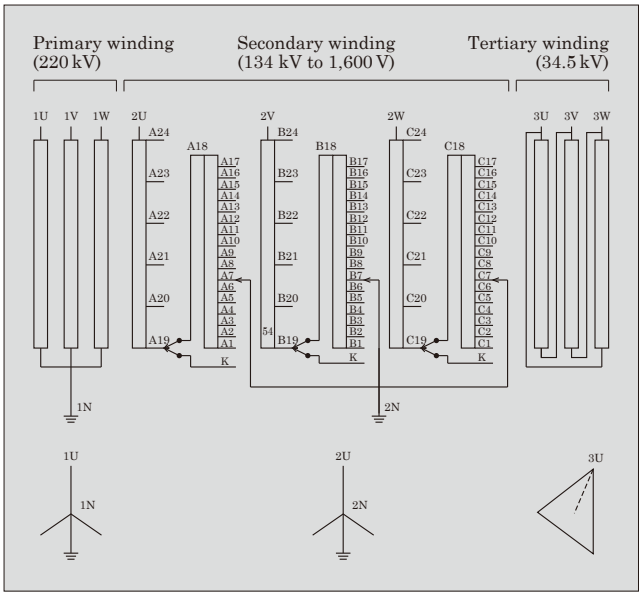

Fig.4 Skeleton diagram of voltage regulating transformer

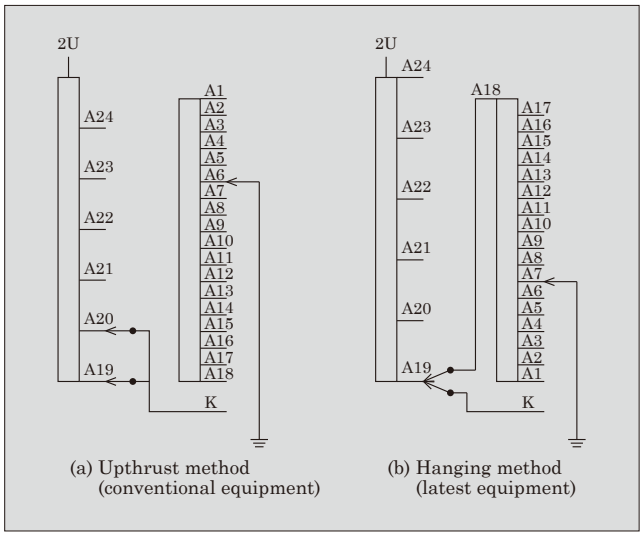

Fig.5 Comparison between tap structures

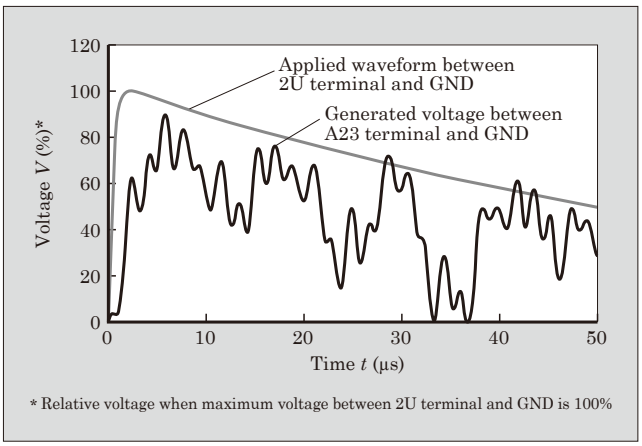

Fig.6 Estimate example of voltage distribution

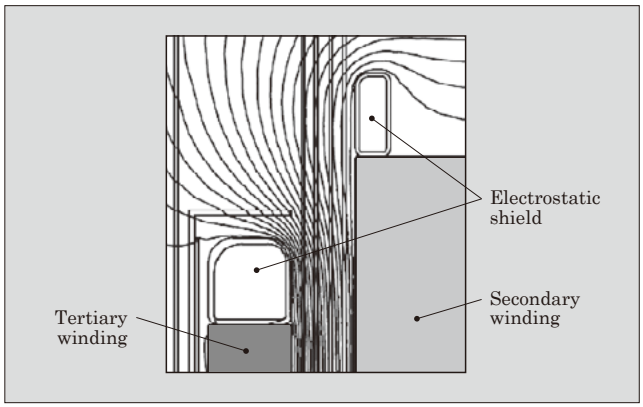

Fig.7 Example of electric field distribution between secondary winding and tertiary winding

distribution between the secondary winding and tertiary winding. We simulated the electric field strength between each terminal, in addition to between the secondary and tertiary windings. We thereby confirmed that the electric field strength at each part was lower than the allowable value, demonstrating that the design is capable of securing the necessary insulation distance without fail.

We also performed magnetic field distribution analysis, impedance calculation, mechanical strength calculation, and eddy current loss calculation at each tap to reflect the results in the design, satisfying customer requirements for the tank temperature, impedance, short-circuit strength and loss.

4. Efforts for Rectifiers

As rectifiers are used with higher currents, it is necessary to implement measures to prevent internal short-circuit accidents, as well as to minimize damage in the event of an accident.

4.1 Preventive measures for internal short-circuit accidents in rectifiers

If an abnormal current (overload, over-current, short-circuit and cross current) flows into a rectifier semiconductor, the pressure in the semiconductor increases. If the semiconductor case cannot withstand the internal pressure, it ruptures and emits gas into the rectifier cubicle (a volume of 38.3 m^3). Following are measures taken against such accidents:

(1) Protection of rectifier semiconductors using fuses

To protect rectifier semiconductors from the abnormal current and minimize effects on other semiconductors, fuses have been connected in series. The fuses are required to meet the voltage and current specifications of the rectifier and have the capability to fast interrupt abnormal current before the semiconductor case ruptures. In particular, since aluminum smelting equipment uses a high current, we perform verification tests to confirm the interruption performance of the fuses. Figure 8(a) shows the test circuit in the verification test, Fig. 8(b) shows an semiconductor simulation short-circuit test system consisting of an semiconductor and fuses for semiconductor protection, Fig. 8(c) shows a short-circuit current waveform and Fig. 8(d) shows a current waveform at the time of fuse interruption. When the short-circuit current (254 kA at the maximum) shown in Fig. 8(c) flows into the test circuit, the current is interrupted by the fuses for semiconductor protection, but the current remains flowing into

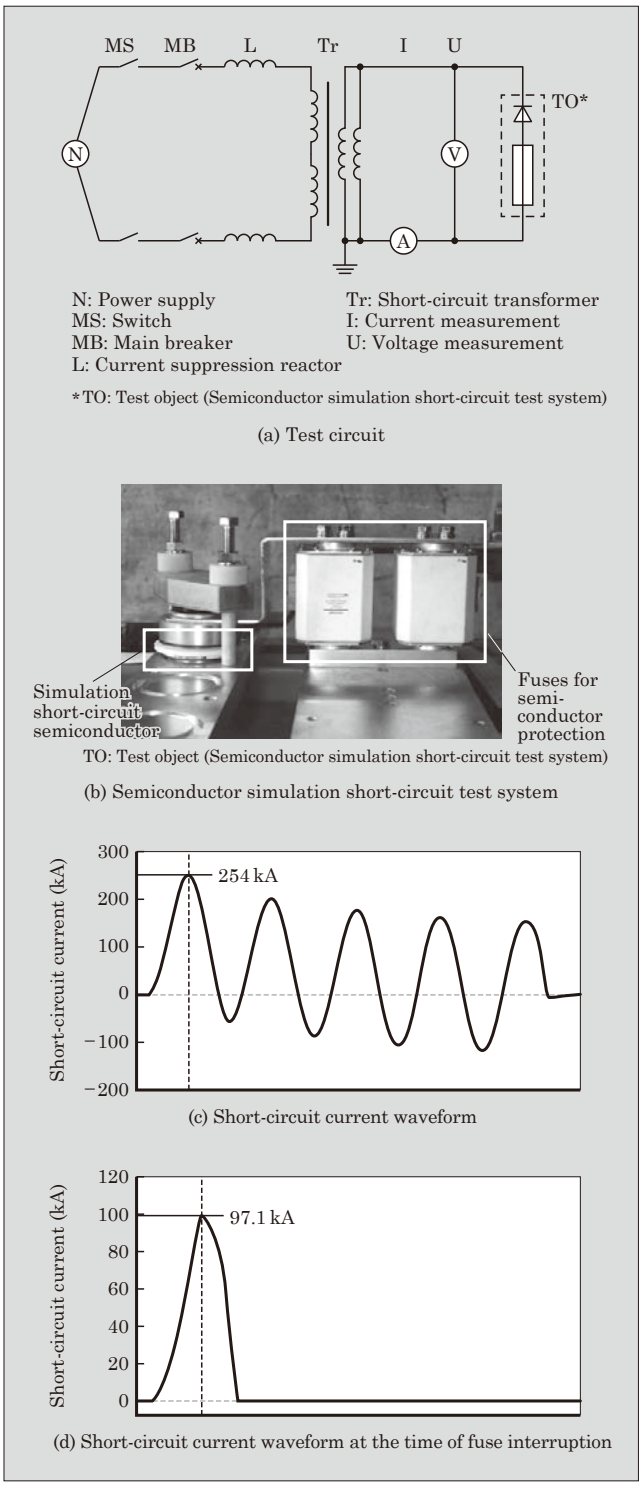

Fig.8 Verification test

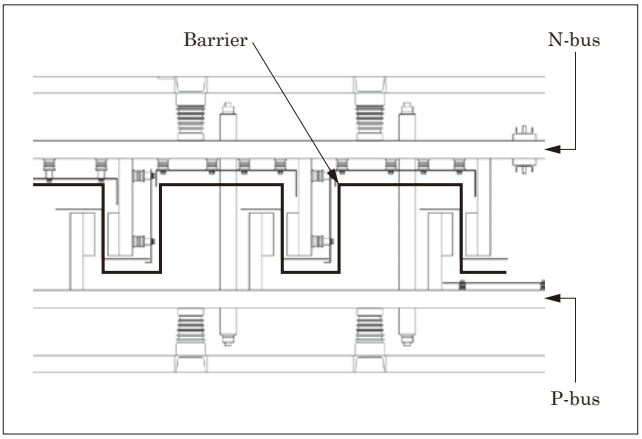

Fig.9 Arrangement of barrier between poles (plane view)

the semiconductor during the period until interruption as shown in Fig. 8(d). Since the interrupting current value is limited at 97.1 kA and lower than 99.5 kA, which is the breakdown current, the semiconductor case does not rapture.

(2) Prevention of internal short-circuit accident by installing barriers

Figure 9 shows the barrier inserted between the main circuit conductors (P and N buses) to physically isolate them to prevent internal short-circuit accidents caused by gas emitted into the rectifier cubicle when the semiconductor case ruptures due to abnormal currents.

4.2 Preventive measures for damage to rectifier cubicles in the event of an accident

Sufficient preventive measures have been taken for internal short-circuit accidents in rectifiers, but to prevent damage due to internal pressure increase in the event of an internal short-circuit accident, pressure relief devices have been installed on the ceiling part of the rectifier. We adopted the following manner to analyze and evaluate whether there was damage to the rectifier cubicle during the operation of the pressure release device releasing the internal pressure out of the cubicle.

(1) Calculation of the internal pressure increase value in the rectifier cubicle

Figure 10 shows the arc energy and internal pressure increase. Figure 10(a) shows the established analysis model, which assumed that the position at which the distance between the main circuit conductors was shortest was to be the starting point of the short circuit (short-circuit point). First, we calculated the generated energy (arc energy) from the relationship between the distance from this short-circuit point and the short-circuit current generated at the rectifier operation point. Next, we estimated the pressure change that occurs when the arc energy raised the air temperature in the cubicle. As a result, as shown in Fig. 10(b), the values for the main circuit compartment, disconnector compartment and cubicle cooling compartment were

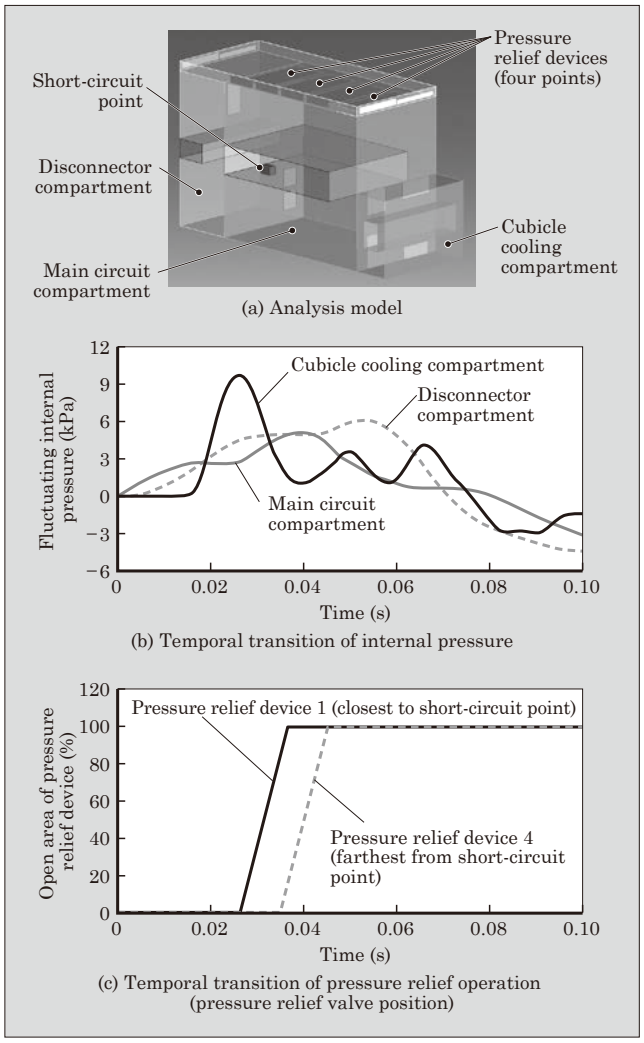

Fig.10 Transition of arc energy and internal pressure increase

all lower than the target of 10 kPa. As shown in Fig. 10(c), pressure relief device 1, which is closest to the short-circuit point, was activated at approximately 0.03 s following the short circuit, and pressure relief device 4, which is farthest from the short-circuit point, was fully opened after approximately 0.05 s following the short circuit. The pressure relief devices activated within such a short time thereby suppressed the pressure increase in the cubicle.

(2) Analysis of stresses on rectifier cubicle

For the increase of the internal pressure described above, the stresses applied to the wall surface of the rectifier cubicle were analyzed, and the deformation of the rectifier cubicle was confirmed from the stress. Figure 11 shows the results of the stress analysis of the rectifier cubicle used to confirm the amount of deformation. The red points in the figure are parts where significant deformation was seen. We confirmed that the amount of stress (400 MPa or less) was not enough to cause damage.

As a result, we confirmed that even if a short circuit occurred in the rectifier, the rectifier cubicle would not be damaged because the pressure release device

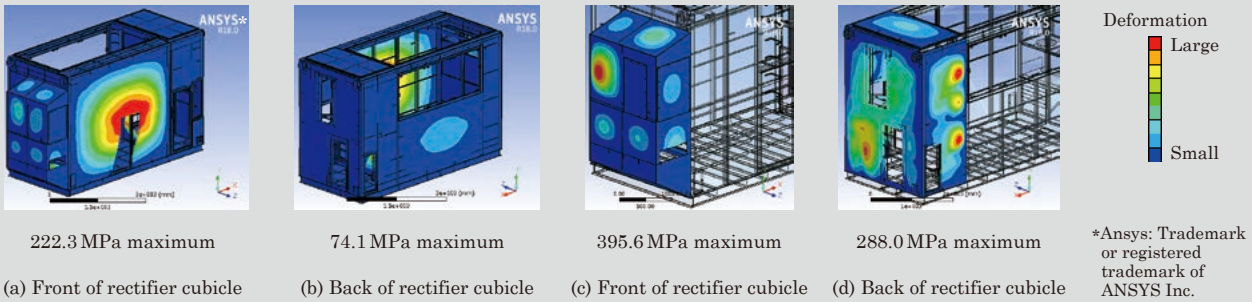

222.3 MPa maximum
(a) Front of rectifier cubicle

74.1 MPa maximum
(b) Back of rectifier cubicle

395.6 MPa maximum
(c) Front of rectifier cubicle

288.0 MPa maximum
(d) Back of rectifier cubicle

*Ansys: Trademark or registered trademark of ANSYS Inc.

Fig.11 Results of the stress analysis for the deformation of the rectifier cubicle

would operate to release the internal pressure out of the cubicle before the rectifier cubicle ruptured.

5. Countermeasures Against Harmonics for Transformer Rectifiers

Aluminum smelting facilities are generally structured with redundant AC power supplies and harmonic filters as well as transformer rectifiers. However, in recent years, the AC power supplies of transformer rectifiers has become complicated, and they often receive power from off-premises commercial power sources in addition to on-premises private generators. Therefore, multiple operation pattern exists in a power supply system, and the harmonic impedance on the AC power supplies when seen from the transformer rectifier fluctuates in each case. In addition, the amount of harmonics generated is increasing as equipment capacity increases.

Fuji Electric is continuing to develop system analysis technologies to predict local harmonic generation more accurately. In particular, for transformer rectifiers for aluminum smelting equipment, we are making efforts to refine the following analysis models using general-purpose system analysis software typified by EMTP-RV*1:

(a) Multi-pulse rectification model with multiple units (72-pulse rectification)
(b) Integrated control algorithm for multiple units
(c) OLTC model and voltage regulating reactor model

In addition to these, by modeling power supply systems and DC load equipment, it has become possible to precisely predict local operation conditions and estimate the generation of even harmonics and Untheoretical harmonics due to three-phase unbalance, which had been difficult to do in the past.

6. Postscript

This paper described industrial-use power supplies that contribute to the stable operation of material manufacturing equipment. Transformer rectifiers are also necessary for the manufacturing of material products such as green hydrogen, which has been on the rise in recent years, and we believe that they will become increasingly important in the future. We will continue to utilize the technologies cultivated by Fuji Electric to contribute to efforts for the realization of a low-carbon society.

*1 EMTP-RV: It is an acronym for the Electro Magnetic Transient Program-Restructured Version and instantaneous value analysis program for the power system. EMTP is a trademark or registered trademark of the EMTP Alliance.

Medium-Capacity Uninterruptible Power Systems with Improved Replaceability and Stable Operation

KAWASAKI, Daisuke* TSUKUTA, Motohiro* TSUTSUI, Shigeo

ABSTRACT

The need to continue to supply electricity even in a power outage or power supply malfunction has been increasing the demand for medium-capacity uninterruptible power systems (UPSs) in factories and broadcasting facilities. The product line of medium-capacity UPSs need to include varied types to meet the specifications of individual load equipment. Also required are flexibly meeting the need for equipment replacement and predictive maintenance for stable operation. Fuji Electric has newly developed its "FX Series" medium-capacity UPSs to meet various needs for replacement by reducing their footprint and expanding the range of the battery voltage. A component failure diagnosis with abnormality symptom detection functions has allowed degraded parts to be replaced before failure, improving operational stability.

1. Introduction

Many factories, broadcasting facilities and communication facilities are often configured with 200-V equipment with medium power consumption (10 to 100 kVA). These facilities have small-scale power supply systems of various capacities, and the demand for uninterruptible power systems (UPSs) has been increasing to supply electricity continuously even during a power outage or power supply malfunction.

Fuji Electric has newly developed the "FX Series" medium-capacity UPS. While maintaining the specifications same as those of existing products, we have minimized the footprint, expanded the applicable battery voltage range to meet the need for replacement flexibly. It is equipped with Fuji Electric's unique abnormal sign detection to diagnose component failure. This paper describes this medium-capacity uninterruptible power system that features enhanced replacement support and stable operation.

2. Conventional Medium-Capacity UPSs

2.1 Overview

The UPS supplies stable power with a constant voltage and constant frequency to load equipment using energy stored in batteries even in the event of power failure, such as voltage fluctuation or power outage.

Figure 1 shows current and voltage waveform data during power failure and recovery. Even when a power outage occurs and the input voltage is interrupted, a continuous stable voltage is supplied. In addition, the output voltage fluctuation is less than 2% during power outages and recovery of power, and inrush current generation due to voltage variance is suppressed, thus enabling stable system operation without affecting the load equipment.

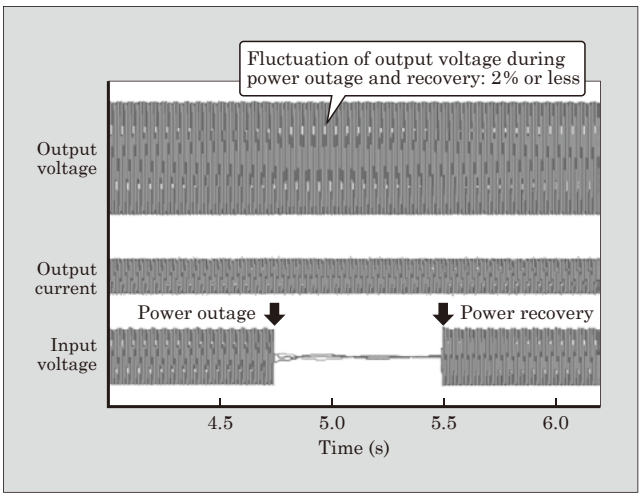

Fig.1 Waveform data of current and voltages in power outage and power recovery

2.2 Product line-up

Table 1 shows the product line-up of Fuji Electric's 200-V UPSs (conventional products) To meet a wide

Table 1 Product line-up of Fuji Electric's 200-V UPSs (conventional products)

Series	Insulation system	Number of phases	Voltage (V)	Capacity (kVA)
UPS6000D-1	Insulated	Single-phase	200/100	10 to 100
UPS6100D-3		Three-phase	200	
UPS7100MX-3	Non-insulated			

* Power Electronics Energy Business Group, Fuji Electric Co., Ltd.

variety of customer specifications, we offered three series of products: the "UPS6000D-1," "UPS6100D-3" and "UPS7100MX-3." They are available in insulated or non-insulated types, three-phase or single-phase types, and capacities ranging from 10 to 100 kVA.

2.3 Issues with conventional models

(1) Size reduction

The installation area varied from model to model, and it was difficult to respond flexibly to replacement. The size also needed to be further reduced to meet the requirement of customers with footprint constraints.

(2) Expansion of applicable battery voltage range

Medium-capacity UPSs are mainly configured to combine battery panels, but the battery voltage of conventional products was only 360 V (180 cells) or 384 V (192 cells). As a result, it was not always possible to satisfy customers who intend to replace only a UPS and leave a battery panel without replacing it.

(3) Power factor correction

Although a rated load power factor of 0.8 has been the norm for conventional medium-capacity UPSs, an increasing number of facilities are now requiring an input power factor of 0.9. To meet the needs of such customers who require more power, UPSs with a capacity of one rank higher were conventionally selected, but in some cases, they were unable to meet the customer's requirements in terms of cost and size.

(4) Shortened installation period

Conventional UPS panels and input and output panels were transported separately, and wiring work was performed locally, causing prolonged installation periods.

(5) Improved maintainability

We provide 24-hour maintenance system for medium-capacity UPS to ensure the continuity of power supply. In addition to this meticulous maintenance service system, it was necessary to further improve the stable operation of UPSs by applying new technologies to improve maintainability, such as component failure diagnosis using an abnormal sign detection function.

3. "FX Series" Medium-Capacity UPSs

3.1 Overview

The specification range of the conventional products have been maintained and integrated into the newly developed FX Series of medium-capacity UPS. Table 2 shows the product line-up of the FX Series. While expanding the series, we plan to adopt a platform design and ultimately reduce the overall series' external dimensions to two types. Furthermore, the standardization of parts makes it easier to replace parts in the event of failure, improving maintainability compared to conventional products.

Figure 2 shows the appearance of the newly developed "UPS6600FX" (insulated, three-phase, 200-V type 50-kVA model), and Table 3 shows the specifications.

Table 2 Product lineup of the "FX Series"

Series	Insulation system	Number of phases	Voltage (V)	Capacity (kVA)
UPS6600FX	Insulated	Single-phase	200/100	10 to 100
UPS7600FX	Non-insulated	Three-phase	200	

Fig.2 "UPS6600FX" (insulated, three-phase, 200-V type 50-kVA model)

Table 3 Specifications of the "UPS6600FX" (insulated, three-phase, 200-V type 50-kVA model)

Item		Performance and specifications
UPS system		Normal inverter feeding
Rated output capacity		50 kVA
AC input	Number of phases (Number of lines)	Three-phase, three-line
	Voltage	200/210 V ± 15% (220 V is available as an option)
	Frequency	50/60 Hz ± 5%
	Power factor	0.98 or more
	Current harmonic distortion rate	5% or less
AC output	Number of phases (Number of lines)	Three-phase, three-line
	Voltage	200/210 V ± 1% (220 V is available as an option)
	Load power factor	0.9 (delay)
	Transient voltage fluctuation	5% or less (load 0 ⇔ 100%)
	Output voltage distortion factor	2% or less (linear load) 5% or less (rectifier load)
	External synchronization frequency range	±5% or less
	Overload capability	125%: 10 min 150%: 1 min

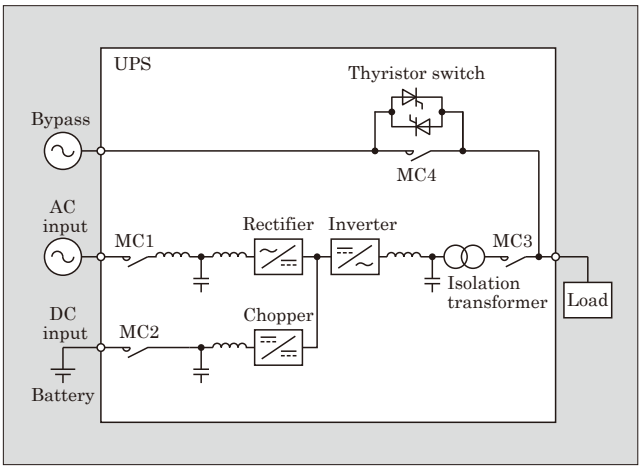

Fig.3 Main circuit block diagram of the "FX Series"

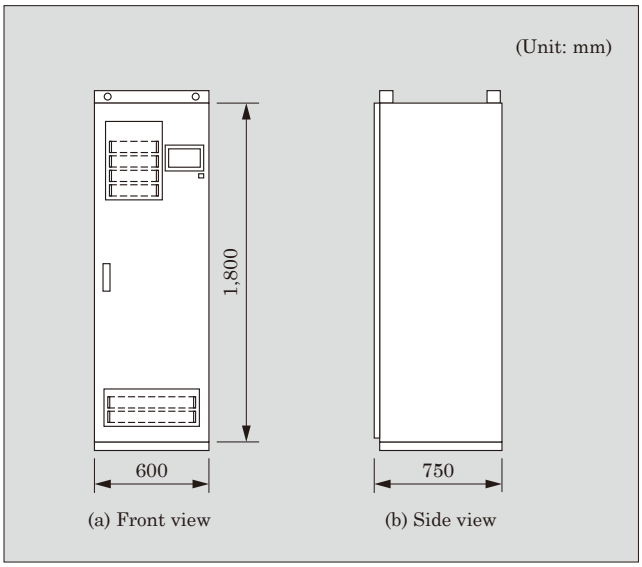

Fig.4 Outer view of "UPS6600FX" (insulated, three-phase, 200-V type 50-kVA model)

3.2 Operation

Figure 3 shows the main circuit block diagram of the FX Series. This series uses a normal inverter feeding system consisting of a rectifier, which converts AC to DC, and an inverter, which converts DC to AC. A chopper is also connected to the DC input to perform charge and discharge control of the battery.

In the normal operating state, in which the AC input is within the normal range, the inverter supplies stable power with a constant voltage and constant frequency to loads. The rectifier controls the AC input current of the UPS to be a sine wave with a power factor of approximately 1, while the chopper charges the storage battery. If the AC input is cut off, the chopper raises the voltage of the battery to an appropriate DC voltage, and the inverter then converts the DC into stable AC power and supplies it.

In addition to the above mentioned operations, the chopper also control battery discharge when power is supplied to a load from both the AC input and the battery, such as during overload, input voltage drops, and power walk-ins, in which power supply is gradually switched from the battery to the grid during power recovery.

When the inverter is unable to supply power due to failure, it switches the power supply from the inverter to the bypass.

3.3 Features

(1) Size reduction

We optimized component selection, component placement, and cooling structure while taking into account the diverse product groups that comprise the FX Series. As a result, compared with the previous product model with the largest footprint, the width was reduced from 700 mm to 600 mm, and the footprint was reduced by 14%. Figure 4 shows the outer view of the UPS6600FX (insulated, three-phase, 200-V type 50-kVA model).

(2) Expansion of applicable battery voltage range

The FX Series is equipped with a chopper to control the DC voltage, enabling it to handle battery voltages from 288 to 384 V (144 to 192 cells).

As a result, the battery panels for the combination of UPSs now can be used for products of other manufacturers other than Fuji Electric. It is now possible to select an optimum battery voltage suited to the UPS output capacity.

(3) Measures to improve the rated load power factor to 0.9

Improving the output performance of UPSs to increase power factor will increase the amount of heat generated by the equipment, requiring larger cooling structures. The FX Series has improved cooling performance by increasing the efficiency of the cooling structure. It is thereby the first in the industry to achieve a rated load power factor of 0.9 as a medium-capacity UPS without increasing the external dimensions.

(4) Shortened installation period

The UPS panel for the UPS6600FX products of 50 kVA or less is designed to combine the input and output panel to be wired between them in advance, allowing the panels to be integrated and transported. Thanks to this, on-site wiring work between panels is no longer necessary, and the installation period has been shortened.

(5) Maintainability improvement technologies

(a) Component failure diagnosis with abnormality symptom detection functions

The FX Series is equipped with component failure diagnosis (patent pending) based on Fuji Electric's unique abnormal sign detection function, which performs numerical analysis-based presumption of component performance degradation and the location of the failure that has caused shutdown.

The function uses multivariate analysis technology to analyze the amplitude and derivative values

(time variation) of UPS current and voltage waveforms to calculate estimated degradation values, which are indicators of the degree of degradation. Those values and the deviation from the threshold values are used to diagnose component degradation and predict replacement timing.

Figure 5 shows an example of the deterioration estimate obtained by the multivariate analysis from the waveforms of the output voltage and current and related data obtained when the cutoff frequency of the output filter is increased in a simulated manner to reproduce the state of the filter performance deteriorated. As the performance of the output filter degrades, the output waveform distortion increases due to leakage of UPS switching ripple into the output power and output current, but there is no apparent noticeable change in the output voltage or output current waveforms in Fig. 5. However, the deterioration estimate changes according to the performance deterioration of the output filter.

Figure 6 shows an overview of the value analysis. This analysis analyzes the voltage and current waveforms detected in the control system in real time to detect abnormalities on the basis of the calculated deterioration estimate. These data are saved in the memory in the control system.

During periodic maintenance, maintenance service personnel obtain the stored deterioration estimates and compare how much these deviate from the values at the time of delivery to determine the current deterioration status of the components and predict when they should be replaced. Figure 7 shows a conceptual diagram of replacement timing prediction using degradation estimates. By finding deteriorated parts before a failure and replacing them, failures can be prevented from occurring.

In the event of a UPS failure or other malfunction, maintenance service personnel can retrieve data from the target model on-site and rapidly presume the part that needs to be replaced. This presumption result facilitates the reduction of time for replacing parts in restoration work (see Fig. 8).

(b) Use of a wide color liquid crystal touch panel

The FX Series is equipped with a 7-inch wide color liquid crystal touch panel larger than the con-

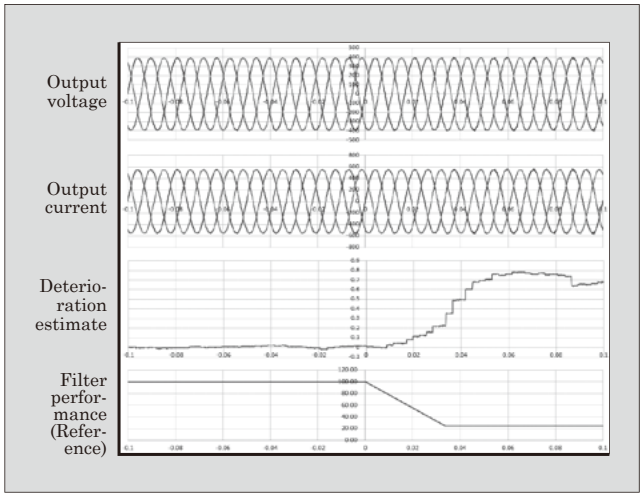

Fig.5 Operation waveform and deterioration estimate at time of output filter deterioration

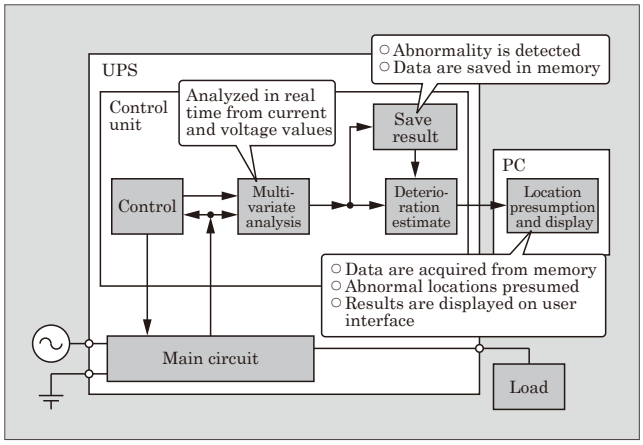

Fig.6 Overview of value analysis

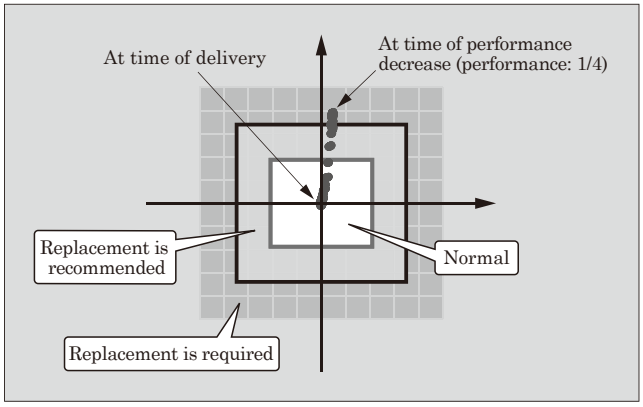

Fig.7 Conceptual diagram of replacement timing prediction using deterioration estimate

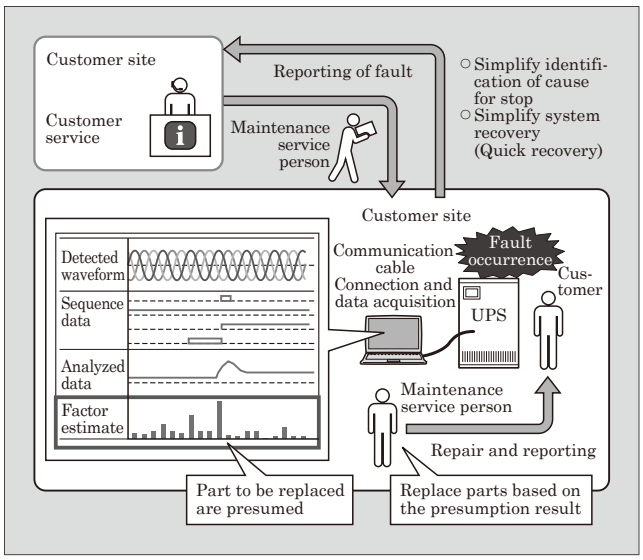

Fig.8 Response at time of failure occurrence

ventional product on its front panel. The operation screen with a simple, sophisticated design displays operating state, failure history and operation guidance to improve maintainability.

(c) Network connection and operating state monitoring

As a standard feature, the FX Series is equipped with a communication card compliant with the Modbus*1 specifications, which are widely used as a connection method for industrial equipment. By connecting to a customer facility network using Modbus, the FX Series can be constantly monitored (operating state monitoring and failure information notification) on the network.

Furthermore, adding the Web/SNMP communication card on the UPS to connect the network, users can monitor the operating state from a standard web browser and receive failure information by email.

The operating state of the UPS can be monitored, such as output power trends, operation history, and failure history through dedicated monitoring software.

3.4 Efforts for quality improvement in development design

The development phase of the FX Series evaluated software with a simulator (HILS: Hardware-in-the-Loop Simulator). Figure 9 shows an illustrative diagram of the evaluation system. We used the system to find and correct bugs and errors, ensuring stable operation of the product.

Furthermore, by simulating the behavior of equipment under input and load conditions that are difficult to achieve in actual equipment verification, we detected and corrected defects that had been difficult to detect in advance and accumulated knowledge that will lead to early recovery and minimize downtime in the event of a defect.

*1 Modbus: Trademark or registered trademark of Schneider Automation, Inc.

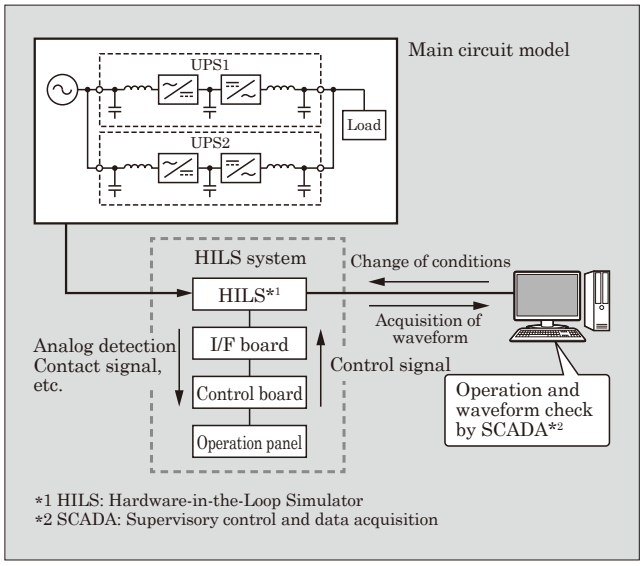

Fig.9 Illustrative diagram of the evaluation system

4. Postscript

This paper described medium-capacity uninterruptible power systems with enhanced replacement support and improved stability of operation. While improving the output performance with a rated load power factor of 0.9, the new series also features a reduced footprint to enhance its replacement capability, as well as improved stabilization of operation by incorporating Fuji Electric's unique predictive maintenance function for detecting abnormal conditions.

We will continue to improve this line-up going forward, and we plan to complete the product release of all models by FY2023. Moreover, we will further improve reliability and meet customers' expectations by enhancing component failure diagnosis with the abnormal sign detection function.

Palm Fatty Acid Ester Filled Transformer That Contributes to Reducing Environmental Load

HIKOSAKA, Tomoyuki* CHIBA, Koichiro*

ABSTRACT

Mineral oil, which has been used as the insulating oil in oil-filled transformers, has problems such as CO_2 emission at the time of disposal and environmental pollution at the time of leakage. On the other hands, vegetable-based insulating oils suffer from a poor cooling effect and low oxidation stability. It is against this backdrop that Fuji Electric, in collaboration with Lion Corporation, developed a palm fatty acid ester (PFAE) with low kinematic viscosity and high oxidation stability through esterification, distillation and purification process of palm oil. Furthermore, Fuji Electric also developed a palm fatty acid ester filled transformer using the PFAE and confirmed that it possesses excellent insulating, cooling, and long-term stability properties. PFAE can be reused as diesel fuel without specific treatment when being disposed, and even if it leaks into the soil, the biodegradation reaction by microorganisms can reduce the impact on the environment.

1. Introduction

To achieve carbon neutrality, in recent years, various industries have demanded products using alternative oil resources. As insulating oil for oil-immersed transformers, mineral oil has commonly been used. However, it has disadvantages, such as CO_2 emissions at the time of burning for disposal and environmental pollution at the time of leakage, and countermeasures are necessary.

It is against this backdrop that Fuji Electric, in collaboration with Lion Corporation, has developed a palm fatty acid ester (PFAE). This material, made from palm oil, has a lower kinematic viscosity and higher oxidation stability than other vegetable oils.

This paper describes a palm fatty acid ester filled transformer that uses PFAE as insulating oil to contribute to reducing environmental loads.

2. Oil-Immersed Transformers

2.1 Overview

The transformer is the equipment that converts the magnitude of AC voltage using the electromagnetic induction phenomena between multiple windings wound around an iron core. They have a history of more than 100 years of industrial use.

Transformers generate hysteresis loss of an iron core and Joule loss of a winding because of their structure. Generally, the conversion efficiency is 99% or more, but as the capacity increases, heat generation due to loss becomes a problem. Therefore, for rated power of several tens of kVA or more, oil-immersed transformers are selected, which use insulating oil as an insulation and cooling medium. Fuji Electric manufactures oil-immersed transformers with rated voltage up to 765 kV and rated power up to 1,100 MVA, which are used in power plants and substations.

2.2 Challenges

(1) Disposal of insulating oil and environmental impact at the time of leakage

Oil-immersed transformers are expected to have a lifetime of approximately 30 years when used under their rated load conditions. For this reason, the following three functions are essential for the insulating oil used as the insulating or cooling medium:

(a) Insulating performance

Insulating oil is used to insulate iron cores, windings, leads and other parts inside transformers. It must secure winding insulation especially against high surge voltages caused by direct lightning or induced lightning to an electric power system.

(b) Cooling performance

Sufficient cooling property is needed to suppress transformer temperature rise due to internal power loss.

(c) Long-term stability

Insulating and cooling characteristics must be maintained without oxidizing deterioration for long-term use.

Mineral oil, which is produced by distilling and refining crude oil, has been widely used as the insulating oil for oil-immersed transformers until now because it satisfies these three essential functions.

On the other hand, it has a disadvantage. To replace or dispose of mineral oil filled transformers, the mineral oil in the tank must be removed and burned, which produces CO_2. In addition, if mineral oil leaks due to deterioration of oil piping packing or an internal failure, it can cause serious environmental pollu-

* Power Electronics Energy Business Group, Fuji Electric Co., Ltd.

tion because it is not biodegradable and may diffuse into and remain in the soil or groundwater for a long period of time. Countermeasures against these problems have become necessary to cope with recent global warming and in terms of environmental conservation.

(2) Size reduction

In the introduction or replacement of oil-immersed transformers, size reduction of equipment is a permanent issue. Size reduction will facilitate user's land utilization, transportation to the site, and installation, enabling users to launch facilities quickly.

3. Palm Fatty Acid Ester Filled Transformer

To solve the issues with mineral oil filled transformers described in Section 2.2, Fuji Electric developed a palm fatty acid ester filled transformer that uses PFAE as an insulation and cooling medium. At present, we manufacture natural convection models with a voltage of 66 / 77 kV and a power of up to 30 MVA.

3.1 Insulating oil (PFAE)

(1) Features

Fuji Electric has developed a vegetable-based oil for transformer insulation as a substitute for mineral oil. As the base oil, we selected palm oil, which is produced in the largest volume among vegetable oils and supplied stably. Because palm oil is highly biodegradable and has no toxicity of chemicals dissolved in water to fish, the environmental impact at the time of leakage is much smaller than mineral oil. However, it has a high kinematic viscosity and is not suitable as an insulating oil for oil-immersed transformers in terms of ensuring the cooling property. We thus have developed a low kinematic viscosity PFAE, which have a molecular structure of saturated fatty acids and be chemically stable and difficult to oxidize, by esterifying (forming ester from acids and alcohols), distillating and refining the palm oil.

Table 1 shows the main characteristics of PFAE in comparison with various insulating oils.

Table 1 Major characteristics of PFAE

Characteristics	Unit	Mineral oil	PFAE	Rapeseed oil	soybean oil
Density (15°C)	kg/L	0.87	0.86	0.92	0.92
Kinematic viscosity (40°C)	mm^2/s	7.7	5.1	35	32.2
Flash point (open type)	°C	150	188	326	326
Flow point	°C	−30	−38	−30	−20
Relative permittivity (80°C)	–	2.2	2.9	2.9	2.9
Dielectric loss tangent (80°C)	%	0.003	0.51	0.05	0.54
Volume resistivity (80°C)	TΩ · m	30	0.13	0.96	0.08
Breakdown voltage (2.5 mm gap)	kV	>80	94	84	82

Features of PFAE as insulating oil are as follows:

(a) Insulating performance

As shown in Table 1, the relative permittivity is higher than that of mineral oil and is close to that of insulating paper as with other vegetable oils. Therefore, the use of PFAE as insulating oil improves the insulation breakdown characteristics.

(b) Cooling performance

Its kinematic viscosity is extremely lower than that of rapeseed oil and soybean oil and is also lower than that of mineral oil, providing excellent cooling properties. Therefore, PFAE is applicable to even large-capacity forced directed insulating liquid circulation transformers.

(c) Long-term stability

When mineral oil is subjected to oxidative degradation treatment (according to JIS C 2101), as shown in Fig. 1, there appear signs of deterioration such as discoloration, generation of black sludge (sinks to the bottom or rises to the oil surface) and increase in the acid value*[1], and the breakdown voltage also decreases.

On the other hand, even after the oxidation degradation treatment, PFAE remains transparent

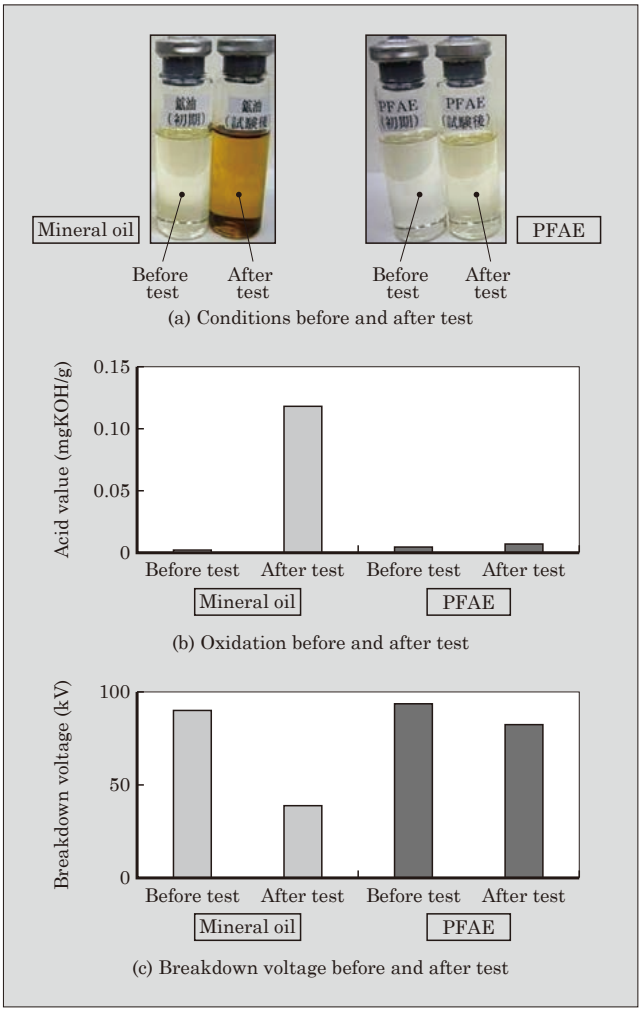

Fig.1 Oxidation stability test results

and shows little increase in the acid value and the breakdown voltage drop. This indicates that the oxidation stability is very high even in the use for a long period of time, and degradation does not easily occur.

(2) Disposal

As described above, the replacement of a mineral oil filled transformer is accompanied by disposing of its oil by burning, generating CO_2. PFAE, meanwhile, is an impurity-free, esterified oil with low kinematic viscosity, which does not require special treatment and is reusable as diesel fuel.

When used as a diesel fuel, it generates CO_2. Nevertheless, it contributes to carbon neutrality because the growing process of palms fixes CO_2 in the atmosphere through photosynthesis.

(3) Environmental impact at the time of leakage

Figure 2 shows the biodegradability of PFAE (according to the OECD Test Guideline 301F). After 28 days, 77% of PFAE degrades and eventually decomposed into water and CO_2 by microorganisms present in the soil.

Regarding fish toxicity (according to JIS K0102), the 96-hour mortality rate is 0% when 10 Japanese killifish are placed in PFAE concentration 100 mg/L, indicating extremely low toxicity.

These features indicate that even if PFAE leaks, its impact on the environment is minimal. PFAE is Eco Mark certified as "biodegradable lubricant version 2.3" (No. 07110003) because it meets the Eco Mark certification criteria for biodegradability and fish toxicity.

We have verified the treatment method in the accident of PFAE leakage based on the oil pollution countermeasures guidelines (for mineral oils). The oil that leaks into the soil is biodegraded by aerobic microorganisms. Even when purification treatment is needed, the inexpensive biosparging method*2 shown in Fig. 3 is applicable at the oil leakage site instead of general excavation and removal.

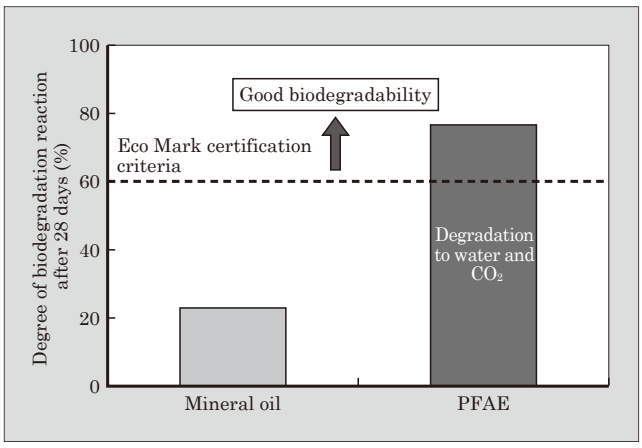

Fig.2 Biodegradability

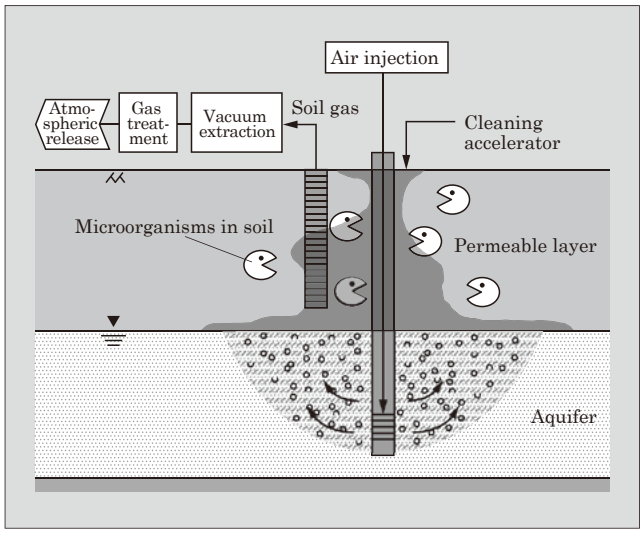

Fig.3 Biosparging method

3.2 Size reduction

Palm fatty acid ester filled transformers can be made more compact than mineral oil filled transformers. For example, when a 6-MVA rectifier transformer is designed with conventional mineral oil (thermal class A) and PFAE (thermal class E), the installation area and the amount of insulating oil of the palm fatty acid ester filled transformer can be reduced to approximately 72% and 60% those of the mineral oil filled transformer respectively. The following describes the reasons for this.

(1) Insulation characteristics

Figure 4 schematically shows the winding structure of a transformer. A kraft paper insulated wire, typically made from copper, is wound concentrically around the iron core. The insulation between the radially adjacent windings is called inter-turn insulation, and the insulation between the sections through the spacer (pressboard) in the vertical direction is called inter-section insulation. We modeled this structure to measure the partial discharge inception voltage when AC and lightning impulse voltages are applied according to the withstand voltage test on transformers (JEC-2200-2014). Table 2 shows the measured results. On the inter-section model in PFAE, the AC and light-

*1 Acid value: An index of the deterioration of fats and oils, which increases with oxidation and hydrolysis. Deterioration progress is accompanied by brownish discoloration and generation of sludge.

*2 Biosparging method: A method to activate aerobic microorganisms in soil and promote biodegradation of oil by laying a pipe that reaches an aquifer at the oil leakage site and injecting air from there. It is applicable to oils with high biodegradability. Depending on the type and concentration of the leakage oil, this method includes the spraying of a purification accelerator to increase the activity of aerobic microorganisms. If necessary, it may also include vacuum extraction of soil gas from the soil, treatment of the gas and release into the atmosphere.

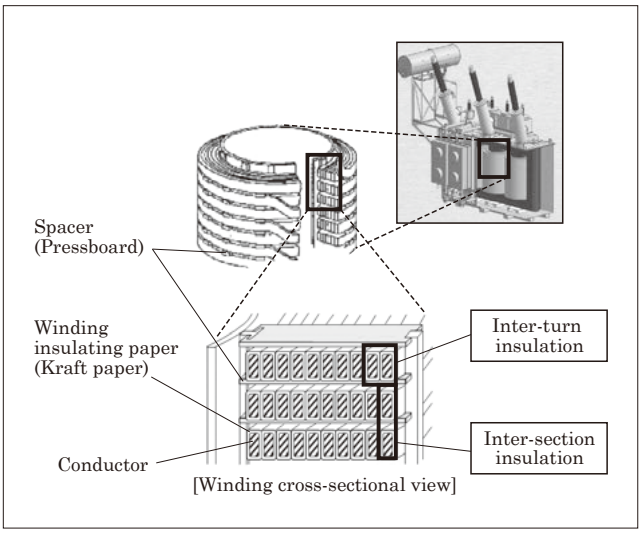

Fig.4 Winding structure of a transformer

Table 2 Measurement results of partial discharge inception voltage of winding model insulation tests

		Inter-turn model	Inter-section model
Test conditions	Model shape	High voltage applied (Unit: mm) 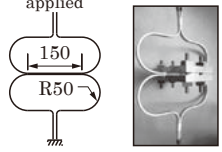	High voltage applied (Unit: mm) 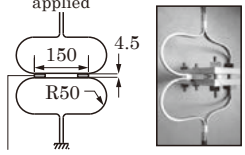
		Wire used: Insulated rectangular copper wire (3 × 13 mm) wound 0.3-mm thick on each side of the kraft paper	
	Test situation	Immersed in mineral oil or PFAE	
	Applied voltage	AC (50 Hz) : RMS 5-kV (1-minute) step up method IMP (lightning impulse) : Crest value 10-kV step up method	
Evaluation results		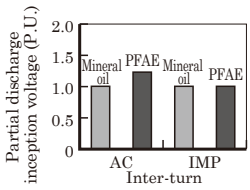	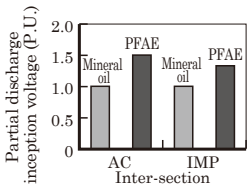
		Inter-section model: Partial discharge starting voltage in PFAE is 1.4 to 1.5 times larger (compared with mineral oil)	

ning impulse partial discharge inception voltages are approximately 1.4 times higher than in mineral oil. This indicates that dielectric breakdown is unlikely to occur, and the palm fatty acid ester filled transformer can have a shorter insulation distance when designed with the same rated voltage and rated power. It thus becomes possible to reduce the amount of insulating oil and to reduce the tank size.

The reason why the insulating property of the palm fatty acid ester filled transformer is particularly high between the sections is explainable using the dielectric constant matching effect.

The insulation breakdown at the winding is caused by the concentration of electric field at the weakest point where the insulating oil, the winding insulating paper and the spacer (pressboard) touch (wedge shaped gap). However, when they have close relative permittivity, permittivity matching effects can work to mitigate concentration of electric field to the wedge shaped gap. The relative permittivity of the PFAE is larger than that of the mineral oil and is closer to those of the winding insulating paper and the pressboard, and the permittivity matching effects mitigate the concentration of electric field to the wedge shaped gap, and electric breakdown is unlikely to occur.

Figure 5 shows equipotential diagrams in inter-section models. Focusing on the wedge shaped gap, the number of equipotential lines is smaller and the spacing is wider for PFAE, meaning that the concentration of electric field is mitigated as compared with that in mineral oil.

(2) Cooling characteristics

The kinematic viscosity of PFAE is approximately 0.6 times that of mineral oil, and palm fatty acid ester filled transformers have higher cooling characteristics than mineral oil filled transformers. Using this characteristics, we adopt a high-temperature design with the amount of insulating oil reduced to decrease the tank size. Operation using only a smaller number of coolers also becomes feasible. The details are below.

Figure 6 shows a comparison of cooling characteristics. With respect to the secondary winding temperatures (measured values) with use of PFAE and mineral oil as the insulating oil for a roof delta transformer (with a rated power of 2,000 kVA and a rated voltage of 66 kV) for feeding, the temperature with PEAE was about 1 K lower than mineral oil, and it became 2 K lower as the load factor increased. The heat trans-

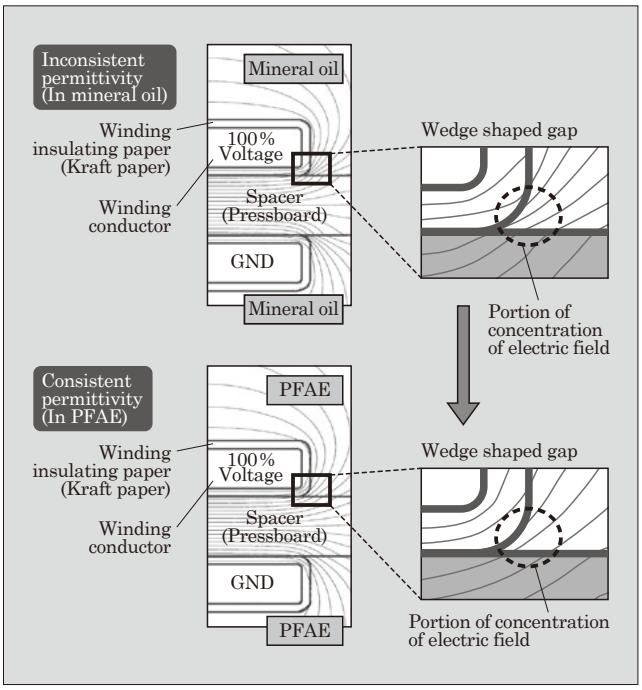

Fig.5 Equipotential diagrams in inter-section models

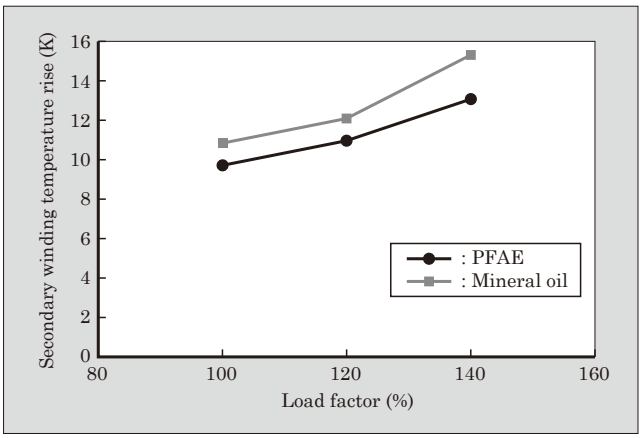

Fig.6 Comparison of cooling characteristics

fer coefficient from the winding to the oil is 1.1 times higher for PFAE than for mineral oil.

In addition, the volume resistivity of PFAE is two orders of magnitude lower than that of mineral oil as shown in Table 1, and PFAE does not contain sulfur, which is a substance causing streaming electrification*3. Therefore, there is little concern about streaming electrification as compared with mineral oil. Eliminating streaming electrification will allow the transformer to increase the circulating flow velocity of the insulating oil to enhance the cooling performance.

Figure 7 shows charging characteristics in pressboard oil duct models. We used the pressboard oil passage in the transformer, in which electric charges tend to accumulate, as a model. As shown in Fig. 7(a), the average values of electric field values were measured at eight points on the model filled with PFAE or mineral oil, and they are plotted against time immediately after the application of voltage. Figure 7(b) shows the electrode shape of the pressboard oil duct model and the eight measurement points.

With PFAE, the electric field value immediately after the voltage application was 1.1 P.U., and the time constant of charge relaxation (time for the electric field value immediately after the voltage application to reach 1/e) attenuated in a short time of approximately 10 s. On the other hand, with mineral oil, the electric field value immediately after the voltage application was 1.6 P.U., which was higher than PFAE. In addition, the time constant of charge relaxation was approximately 3,000 s, which was 300 times larger than that of PFAE.

*3 Streaming electrification: An electrostatic phenomenon in which charge separation occurs between a liquid and a solid surface when the liquid flows on the solid surface. In a large-capacity transformer, when the flow velocity of the insulating oil circulating inside increases, if the charge accumulation in the solid insulator exceeds the in-oil or creeping discharge level, electric discharge occurs inside the transformer, which may lead to destruction of the whole circuit of the winding.

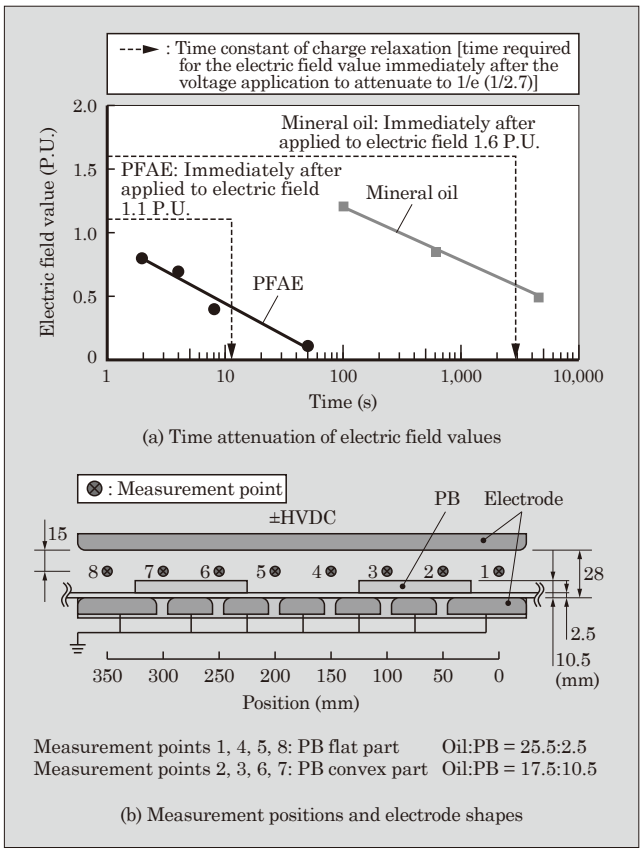

Fig.7 Charging characteristics in pressboard oil duct models

These results demonstrate that streaming electrification is unlikely to occur in palm fatty acid ester filled transformers. Using this properties, we can maintain the cooling performance of the transformer by increasing the circulating flow velocity of the insulating oil even when reducing the amount of the insulating oil or the number of coolers to downsize the equipment.

(3) Lifetime optimization

Cellulose molecules of the insulating paper used inside oil-immersed transformers deteriorate with thermal decomposition and hydrolysis, and the average degree of polymerization (number of monomers constituting the polymer) decreases. When the average degree of polymerization decreased to 45% of the initial state, the winding insulating paper can tear at the generation of short-circuit force due to lightning to the power system, causing interlayer short circuit or ground fault of the winding. When this happens, the transformer has been determined to reach the end of its life.

PFAE, as with other vegetable and silicone oils, has a feature that it has the saturated moisture content that is 1 to 2 orders of magnitude higher than that of mineral oil. When it is used for oil-immersed insulation, moisture on the insulating paper is thus likely to permeate into the oil due to the moisture equilibrium between the insulating paper and the oil, inhibiting the insulating paper from hydrolyzing. As a result, the lifetime of the insulating paper is longer than that

Table 3 Lifetime comparison of thermally upgrade amine paper between PFAE and mineral oil

Deterioration temperature (°C)	151.0	160.0	168.5
(1) In PFAE (h)	1,758	655	265
(2) In mineral oil (h)	758	355	164
Ratio between (1) and (2) [= (1)/(2)]	2.3	1.8	1.6

in mineral oil. Further, PFAE has a higher proportion of saturated fatty acids than other vegetable oils and a very high oxidation stability. It is therefore unlikely to deteriorate in oil characteristics despite the increased moisture in the oil.

Table 3 shows a lifetime comparison between thermally upgrade amine paper immersed in PFAE and in mineral oil. This represents a time when thermally upgrade amine paper (winding insulating paper), which is usable at a temperature 10 K higher than kraft paper, thermally deteriorates in PFAE and mineral oil in a nitrogen atmosphere and the average degree of polymerization decrease to 45%.[1] At the same temperature, the lifetime ratio of the thermally upgrade amine paper in PFAE and in mineral oil is 1.6 to 2.3, and the lifetime of the palm fatty acid ester filled transformer is approximately two times that of the mineral oil filled transformer.

Therefore, adopting the design for downsizing, such as reducing the amount of insulating oil used, and for high temperature operation enables the palm fatty acid ester filled transformer to be downsized while having a sufficient remaining lifetime.

3.3 Abnormality diagnosis technology

When local heating or partial discharge occurs inside a mineral oil filled transformer, mineral oil degrades and in turn produce gas, which dissolves in the oil. Abnormality diagnosis of the transformer can be achieved by analyzing the type and pattern of the dissolved gas.

We confirmed that the main constituent molecules of PFAE are carbon and hydrogen as same as those of mineral oil, and the dissolved gas pattern in the oil generated by local overheating and partial discharge is almost the same as that of mineral oil. Therefore, with the use of the information accumulated for the abnormality diagnosis of a mineral oil transformer, we can perform abnormality diagnosis also for a palm fatty acid ester filled transformer.

3.4 Delivery track records

Since the delivery of the first unit in 2008, Fuji Electric has delivered a total of 175 units, with a total capacity of 328 MVA, to the railway and public sectors, and all the units are operating well. In recent years, we raised the thermal class from the conventional A (105°C) to E (120°C) and advanced size reduction to meet various applications and required specifications.

4. Postscript

This paper described a palm fatty acid ester filled transformer that contributes to reducing environmental loads. The operation track records of palm fatty acid ester filled transformers have increased, and not only laboratory level dessolved gas analysis data[2] but also dessolved gas trends in the actual field are becoming clearer. Measures against global warming are an urgent global issue, and it is expected that the replacement of mineral oil filled transformers, which were introduced in large numbers during the high-growth period, with palm fatty acid ester filled transformers will reduce CO_2 emissions and reduce the installation space for transformers.

Fuji Electric also offers transformers that use natural ester (FR3*4), a high flash point insulating oil, to meet the needs of handling nonhazardous materials, as transformers that contribute to reducing environmental impact.

Fuji Electric will continue to provide environmentally friendly products with high customer satisfaction.

Finally, the Okubo Laboratory at Nagoya University cooperated in evaluating the charging characteristics of the pressboard oil duct shown in Fig. 7. In addition, Lion Corporation, West Japan Railway Company, and Kurita Water Industries Ltd. cooperated in the study of the treatment of PFAE at the time of leakage into the soil. We would like to express our gratitude to all those involved in this research.

*4 FR3: A trademark or registered trademark of Cargill, Incorporated.

References

(1) Tokunaga, J. et al. "Lifetime estimation of cellulosic insulation material in palm fatty acid ester for power transformers," IEEE Trans. DEI. 2017, vol.24, no.2, p.1010–1017.

(2) Tokunaga, J. et al. "Palm fatty acid ester as biodegradable dielectric fluid in transformers: a review", IEEE Electrical Insulation Magazine. 2019, vol.35, no.2, p.34-46.

Compact Multi-Purpose Vending Machine

OTSUBO, Tomonori* **NAKANISHI, Toshikazu***

The demand is increasing for vending machines that allow customers to purchase products without face-to-face interaction, as society seeks to prevent the spread of COVID-19. There is also a growing demand mainly among urban retailers to increase sales opportunities outside of store hours in limited spaces, such as storefronts. To meet these demands, Fuji Electric has developed and released "Multi-kun," a space-saving, compact multi-purpose vending machine that can be installed outdoors.

1. Features of "Multi-kun"

Multi-kun, a compact multi-purpose vending machine, will expand sales opportunities in various places such as inside and in front of retail stores, commercial facilities, hotels, offices, and public transportation stations. Figure 1 shows the appearance of Multi-kun, and Table 1 shows its specifications.

1.1 Saving space

Conventional multi-purpose goods vending machines use a spiral system (see Fig. 2) for the product delivery unit. In this system a spiral-shaped conveyor rotates to push out a product that has been inserted into the structure. While the mechanism is simple, restrictions have been established to prevent products that are too tall and unstable from falling over during conveyance and to prevent packaging bags that are too large relative to their contents from being caught in the spiral.

Fig.1 "Multi-kun"

Table 1 Specifications of "Multi-kun"

Items	Specifications
Model	FRM10D5CZ1NM
Dimensions (mm)	W745 × D756 × H1,830
Stock-keeping units	10 selections, 10 selection buttons
Storable product weight	25 to 350 g
Weight	248 kg
Lighting	LED
Installation environment	Installable indoors and outdoors
Product storage temperature *	Refrigerated (0°C to 10°C) Ambient temperature (18°C ± 5°C)

* The cabinet has two compartments on the left and right sides, and temperature modes can be selected from three settings (Refrigerated only, Ambient temperature only, or both).

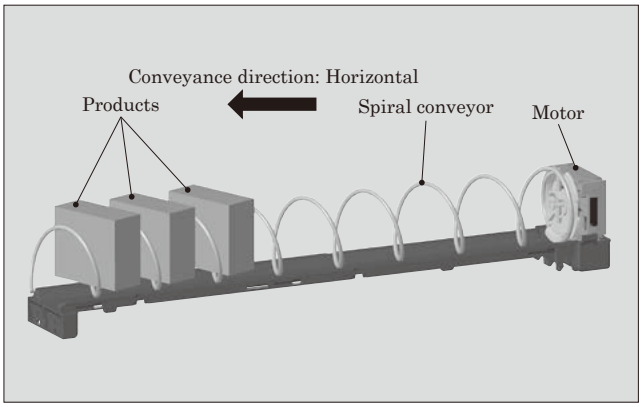

Fig.2 Conventional product delivery unit (spiral system)

For Multi-kun, a chain system is adapted (see Fig. 3) for its product delivery unit. By conveying products vertically, frictional resistance caused by the dead weight of the products is reduced, allowing the product to be conveyed in a stable position. Without using any tools, the gaps between the product shelves can be freely and easily changed according to the product. This mechanism has increases the number of product varieties to be vended.

In addition, changing the product delivery system to a chain system has also reduced the depth dimension of the machine, allowing the installation area to be reduced by 20% that of Fuji Electric's conventional machines. Such space-saving with a small footprint allows the machine to be installed both indoors and

* Food & Beverage Distribution Business Group, Fuji Electric Co., Ltd.

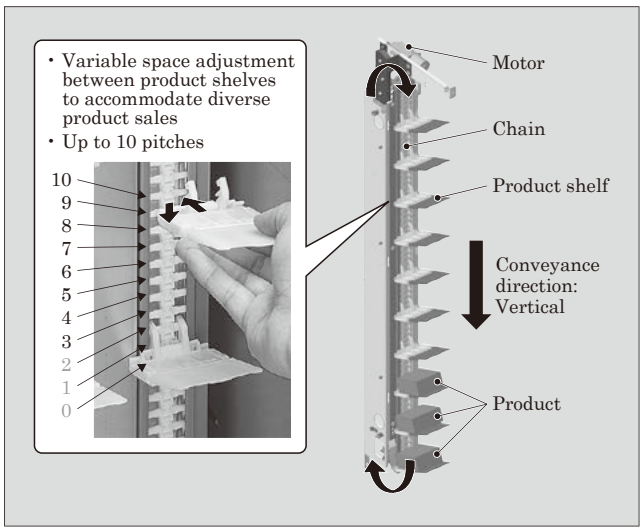

Fig.3 Product delivery unit (chain system)

outdoors in places with high traffic, such as building entrances, storefronts, and offices.

1.2 Out-of-stock detection function

To detect products that are out of stock, conventional goods vending machines employ a countdown system. In this system, the number of times a product can be sold is configured when the product is replenished, and this number is counted down each time the product is sold to detect when it is out of stock. This system does not require an out-of-stock detection mechanism, but a person must configure the number of times a product can be sold. For this reason, insufficient replenishment of products and configuration errors can lead sales opportunity issues.

To address these shortcomings, Multi-kun employs an out-of-stock detection mechanism that monitors whether products are present on the shelves. The out-of-stock detection mechanism comprises an out-of-stock lever that is in contact with the product shelf, a spring for lifting the out-of-stock lever, and a switch for detecting the position of the out-of-stock lever. When the product shelf is lowered from above, the product shelf stop position detection lever rotates and the detection switch is pressed, stopping the product shelf at the out-of-stock detection position [see Fig. 4 (a)]. This mechanism detects the difference in torque caused by the presence or absence of product to determine whether a product is out of stock [see Fig. 4 (b)]. To reliably detect out-of-stock products even for lightweight products, which produce small differences in torque, it is necessary to suppress variations in stop positions of the product shelves. The rotation fulcrums of the out-of-stock lever and the product shelf stop position detection lever are placed coaxially to suppress variations between the levers, thereby reducing variations in product shelf stop positions and enabling detection of the presence or absence of products with a weight as light as 25 g.

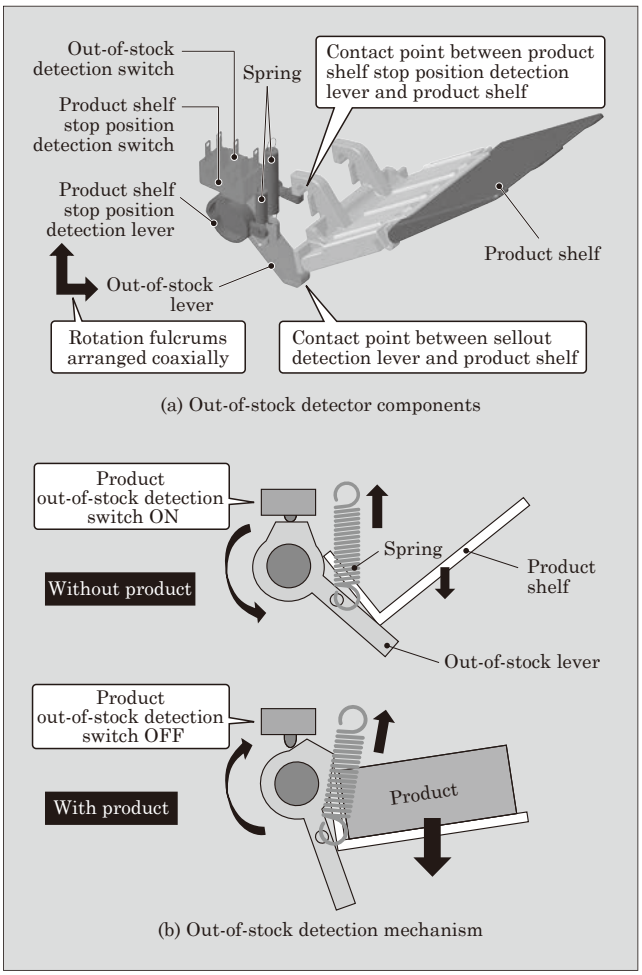

Fig.4 Out-of-stock detection mechanism

1.3 Outdoor installation specifications

Conventional multi-purpose goods vending machines use glass doors so that products are visible. Not only are glass doors prone to theft and have poor waterproof performance, it is also possible for the temperature of products behind glass doors to rise due to sunlight. For these reasons, these machines must have been installed only in indoor spaces.

Multi-kun uses the door structure of a beverage vending machine to improve theft resistance and waterproof performance. Because of its excellent heat insulation and airtightness, it is the first outdoor vending machine that can sell chilled foods, for which temperature control is difficult.

1.4 Product display

Conventional vending machines employ a structure in which one product is displayed on the display shelf assigned to a specific product selection button. For this reason, the number and size of products that can be displayed is limited, and display locations are fixed.

To enable Multi-kun to sell products of various shapes and sizes and display products accordingly, the

product selection buttons are placed in a single location as shown in Fig. 5. This enables products to be displayed freely regardless of the position of the selection buttons. The “free display” structure allows the display to be freely arranged by hooking the claws of the display stand to the board on the back. In addition, the transparent display stand and high-intensity LED lighting brightly illuminate the products for sale to draw customers.

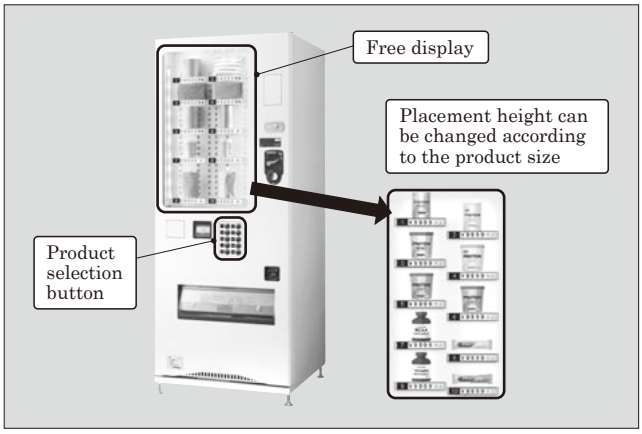

Fig.5 Example of free display

Launch Date

March 2021

Product Inquiries

Solution Marketing Department, New Business Creation Division, Food & Beverage Distribution Business Group, Fuji Electric Co., Ltd.
Tel: +81-3-5435-7077

Overseas Subsidiaries

* Non-consolidated subsidiaries

Fuji Electric website
https://www.fujielectric.com/

America

Fuji Electric Corp. of America
Sales of electrical machinery and equipment, semiconductor devices, drive control equipment, and devices
URL https://americas.fujielectric.com/

Reliable Turbine Services LLC
Repair and maintenance of steam turbines, generators, and peripheral equipment
Tel +1-573-468-4045

Fuji SEMEC Inc.
Manufacture and sales of door opening and closing systems
Tel +1-450-641-4811

Asia

Fuji Electric Asia Pacific Pte. Ltd.
Sales of electrical distribution and control equipment, drive control equipment, and semiconductor devices
URL http://www.sg.fujielectric.com/

Fuji SMBE Pte. Ltd.
Manufacture, sales, and services relating to low-voltage power distribution board (switchgear, control equipment)
URL http://smbe.fujielectric.com/

Fuji Electric (Thailand) Co., Ltd.
Sales and engineering of electric substation equipment, control panels, and other electric equipment
URL http://www.th.fujielectric.com/en/

Fuji Electric Manufacturing (Thailand) Co., Ltd.
Manufacture, sales, engineering and service of low-voltage inverters, instrumentation and sensors, switchgear, gas insulated switchgear, PCS, UPS
Tel +66-2-5292178

Fuji Tusco Co., Ltd.
Manufacture and sales of Power Transformers, Distribution Transformers and Cast Resin Transformers
URL http://www.ftu.fujielectric.com/

Fuji Electric Vietnam Co.,Ltd. *
Sales of electrical distribution and control equipment and drive control equipment
URL http://www.vn.fujielectric.com/en/

Fuji Furukawa E&C (Vietnam) Co., Ltd. *
Engineering and construction of mechanics and electrical works
Tel +84-4-3755-5067

Fuji CAC Joint Stock Company
Provide the Solution for Electrical and Process Control System
URL http://fujicac.com/

PT. Fuji Electric Indonesia
Sales of inverters, servos, UPS, tools, and other component products
URL http://www.id.fujielectric.com/

P.T. Fuji Metec Semarang
Manufacture and sales of vending machines and their parts
URL http://www.fms.fujielectric.com/

Fuji Electric India Pvt. Ltd.
Sales of drive control equipment and semiconductor devices
URL http://www.fujielectric.co.in

Fuji Electric Consul Neowatt Private Limited
Development, manufacuture, engineering, sales and servicing of UPS, Stabilizers, Active Harmonic Filters and other component products
URL https://www.india.fujielectric.com/

Fuji Gemco Private Limited
Design, manufacture, sales, and engineering for drive control systems
Tel +91-129-2274831

Fuji Electric Philippines, Inc.
Manufacture of semiconductor devices
Tel +63-2-844-6183

Fuji Electric Sales Philippines Inc.
Sales of energy management systems, process automation systems, factory automation systems, power supply and facility systems, and power generation
URL https://www.ph.fujielectric.com/

Fuji Electric (Malaysia) Sdn. Bhd.
Manufacture of magnetic disk and aluminum substrate for magnetic disk
URL http://www.fujielectric.com.my/

Fuji Electric Sales Malaysia Sdn. Bhd.
Sales of energy management systems, process automation systems, factory automation systems, power supply and facility systems, and vending machines
URL https://www.my.fujielectric.com/

Fuji Furukawa E&C (Malaysia) Sdn. Bhd. *
Engineering and construction of mechanics and electrical works
Tel +60-3-4297-5322

Fuji Electric Taiwan Co., Ltd.
Sales of semiconductor devices, electrical distribution and control equipment, and drive control equipment
URL http://www.fujielectric.com.tw/

Fuji Electric Korea Co., Ltd.
Sales of power distribution and control equipment, drive control equipment, rotators, high-voltage inverters, electronic control panels, medium- and large-sized UPS, and measurement equipment
URL http://www.fujielectric.co.kr/

Fuji Electric Co.,Ltd. (Middle East Branch Office)
Promotion of electrical products for the electrical utilities and the industrial plants
Tel +973-17 564 569

Fuji Electric Co., Ltd. (Myanmar Branch Office)
Providing research, feasibility studies, Liaison services
Tel +95-1-8382714

Representative office of Fujielectric Co., Ltd. (Cambodia)
Providing research, feasibility studies, Liaison services
Tel +855-(0)23-964-070

■Equity-method Affiliates

Fuji Furukawa E&C (Thailand) Co., Ltd. *
Design and installation contracting for electric facilities construction
Tel +66-2-308-2703

Europe

Fuji Electric Europe GmbH
Sales of electrical/electronic machinery and components
URL https://www.fujielectric-europe.com/

Fuji Electric France S.A.S
Manufacture and sales of measurement and control devices
URL https://www.fujielectric.fr/en

Fuji N2telligence GmbH *
Sales and engineering of fuel cells and peripheral equipment
Tel +49 (0) 3841 758 4500

China

Fuji Electric (China) Co., Ltd.
Sales of locally manufactured or imported products in China, and export of locally manufactured products
URL http://www.fujielectric.com.cn/

Shanghai Electric Fuji Electric Power Technology (Wuxi) Co., Ltd.
Research and development for, design and manufacture of , and provision of consulting and services for electric drive products, equipment for industrial automation control systems, control facilities for wind power generation and photovoltaic power generation, uninterruptible power systems, and power electronics products
Tel +86-510-8815-9229

Wuxi Fuji Electric FA Co., Ltd.
Manufacture and sales of low/high-voltage inverters, temperature controllers, gas analyzers, and UPS
Tel +86-510-8815-2088

Fuji Electric (Changshu) Co., Ltd.
Manufacture and sales of electromagnetic contactors and thermal relays
URL http://www.csfe.com.cn/

Fuji Electric (Zhuhai) Co., Ltd.
Manufacture and sales of industrial electric heating devices
URL http://www.fujielectric.com.cn/fez/

Fuji Electric (Shenzhen) Co., Ltd.
Manufacture and sales of photoconductors, semiconductor devices and currency handling equipment
URL http://www.szfujielectric.com.cn/

Fuji Electric Dalian Co., Ltd.
Manufacture of low-voltage circuit breakers
Tel +86-411-8762-2000

Fuji Electric Motor (Dalian) Co., Ltd.
Manufacture of industrial motors
Tel +86-411-8763-6555

Dalian Fuji Bingshan Vending Machine Co., Ltd.
Development, manufacture, sales, servicing, overhauling, and installation of vending machines, and related consulting
Tel +86-411-8754-5798

Dalian Fuji Bingshan Control Systems Co., Ltd.
Energy management systems, distribution systems, and related system engineering
Tel +86-411-8653-6010

Fuji Electric (Hangzhou) Software Co., Ltd.
Development of vending machine-related control software and development of management software
URL http://www.fujielectric.com.cn/fhs/

Fuji Electric FA (Asia) Co., Ltd.
Sales of electrical distribution and control equipment
Tel +852-2311-8282

Fuji Electric Hong Kong Co., Ltd.
Sales of semiconductor devices and photoconductors
URL http://www.hk.fujielectric.com/en/

Hoei Hong Kong Co., Ltd.
Sales of electrical/electronic components
URL http://www.hoei.com.hk/

FUJI ELECTRIC REVIEW is made of environmentally friendly paper certified by the Forest Stewardship Council® (FSC) and printed with vegetable ink.

MIX Paper from responsible sources FSC® C017911

VEGETABLE OIL INK