Power Electronics Technology: Current Status and Future Outlook

KAWANO Masashi † HIROSE Jun † AIHARA Takashi †

ABSTRACT

Fuji Electric is focusing on power electronics, through which electricity can be handled flexibly, to contribute to the world in the field of energy. Power electronic devices, with circuit technique, control system, and power semiconductor as their base technologies, are expanding into various fields. For inverters, EMC analysis technology, high-speed synchronization communication technology, and water-cooling methods etc. are employed in addition to complying with functional safety standards. For UPS, nickel-metal hydride batteries are introduced and AT-NPC 3-level conversion technology is adopted. In addition, Fuji Electric is developing a wide range of power electronics technologies to enhance power electronic devices for railway vehicles and electric cars, high-efficiency power supplies for servers, and high-capacity PCS and responds to various demands such as safety, miniaturization and energy saving.

1. Introduction

Fuji Electric is focusing on power electronics, through with electricity can be manipulated flexibly, to contribute to the world in the field of energy. The fields of application for power electronics are diverse, and include industrial variable speed driving equipment, industrial power supplies, solar power generation, induction heating equipment, railway electrical equipment, automotive electrical equipment, and the like. In addition to providing power electronics equipment that supports these applications, Fuji Electric also provides the product groups of power semiconductors and electric distribution and control devices, which are critical components for power electronics equipment, to offer powerful components and powerful solutions which make use of them in the various fields (see Fig. 1).

As shown in Fig. 2, in each field, power electronics equipment is contributing to the realization of a sustainable society. With circuit technology, control systems and power semiconductors as base technologies, power electronics technology has been independently developed in each field while incorporating market requests.

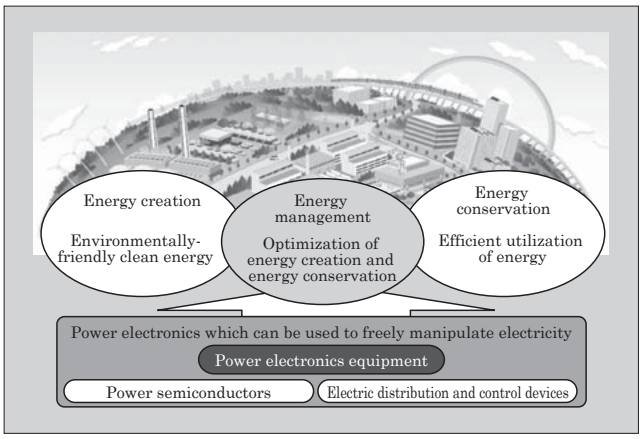

Fig.1 Positioning of power electronics equipment

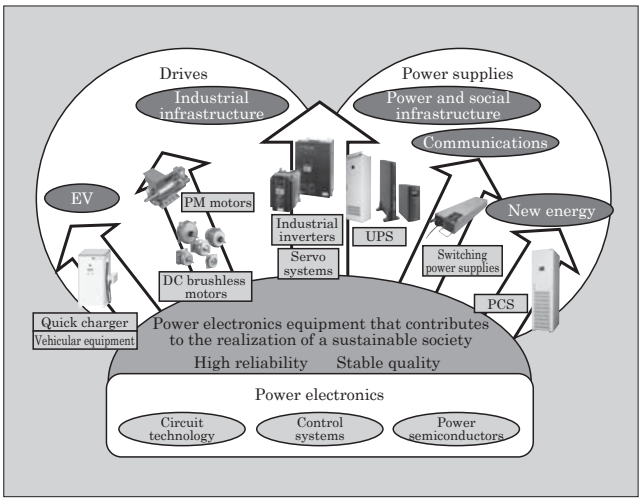

Fig.2 Business areas of power electronics equipment

This paper describes the current state of the technical trends and product development of power electronics equipment from the perspective of how to meet market requests in each field.

2. Market Needs and Technical Trends

Figure 3 shows the evolution of the market needs, the product technology as well as the power semiconductors, electric distribution and control devices, basic technology and analysis technology used in products.

Fuji Electric has a history of developing the product technology necessary to meet market needs.

† Fuji Electric Co., Ltd.

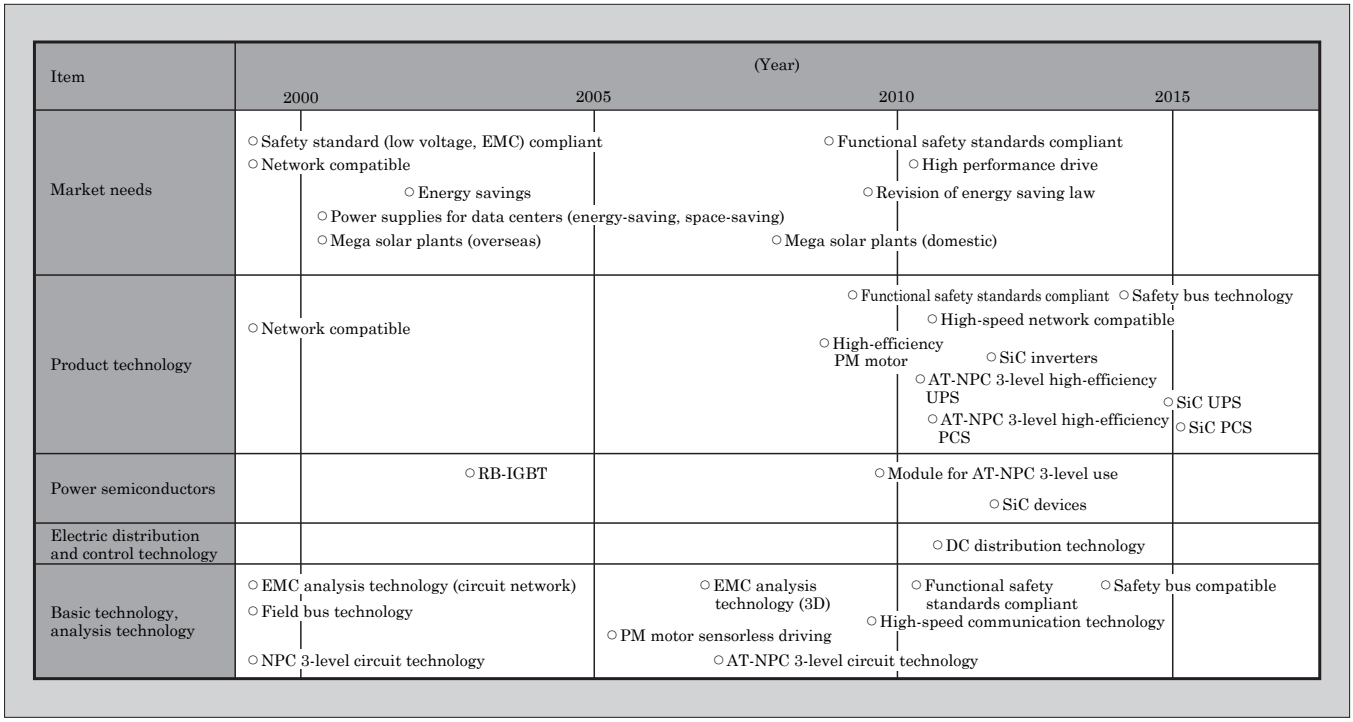

Fig.3 Trends of power electronics technology

Particularly significant achievements include the development of the power semiconductors and electric distribution and control devices required for new products. Specifically, Fuji Electric is developing a custom module that integrates a reverse-blocking insulated gate bipolar transistor (RB-IGBT) or an advanced t-type neutral-point-clamped (AT-NPC) 3-level inverter circuit containing an RB-IGBT. Additionally, Fuji is also developing DC distribution equipment for the power conditioner systems (PCS) used at mega solar plants and the like[(1)].

In this way, power electronics equipment, while responsible for driving technical innovation of power semiconductors and electric distribution and control devices, also provide powerful components that contribute to solutions in various fields through the development of elemental technologies and products.

3. Development Trends of Elemental Technologies and Current Status of Product Development

3.1 Development trends of elemental technologies in various fields

(1) Technology that supports safety standards in drive products

Various standards have been advanced for the purpose of preventing injury accidents involving machinery through performing risk assessments of mechanical systems. In particular, IEC 61800-5-2 has been enacted as a safety standard for drive products (power drive systems).

Fuji Electric is developing products that comply with this functional safety standard. Fuji Electric's inverter products listed in Table 1 support SIL2 (corresponding to ISO13849-1 category 3, performance level D).

Table 1 Products and corresponding safety functions

Product name	Corresponding safety function			
	STO	SS1	SLS	SBC
FRENIC-Multi	○			
FRENIC-MEGA	○			
FRENIC-VG *	○	○	○	○

STO: Safety Torque Off
SS1: Safe Stop 1
SLS: Safely Limited Speed
SBC: Safe Brake Control
*: SS1, SLS, SBC are available as an option

The STO function reduces the failure rate by processing redundant stop signals with redundant circuits even inside the inverter as shown in Fig. 4, and provides a diagnostic function for detecting circuit failure.

In the future, Fuji Electric will support a safety bus and the expansion of corresponding functions.

(2) EMC*1 simulation technology

With globalization, EMC countermeasures for general-purpose inverters are an essential part of product development, and consideration of the type of countermeasures to implement must begin from the design stage. Noise consists of conduction noise and radiation noise, and the relationship between conduction noise and specific structures has become knowable.

*1: EMC (electromagnetic compatibility): Performance in an environment of radiation and conduction noise

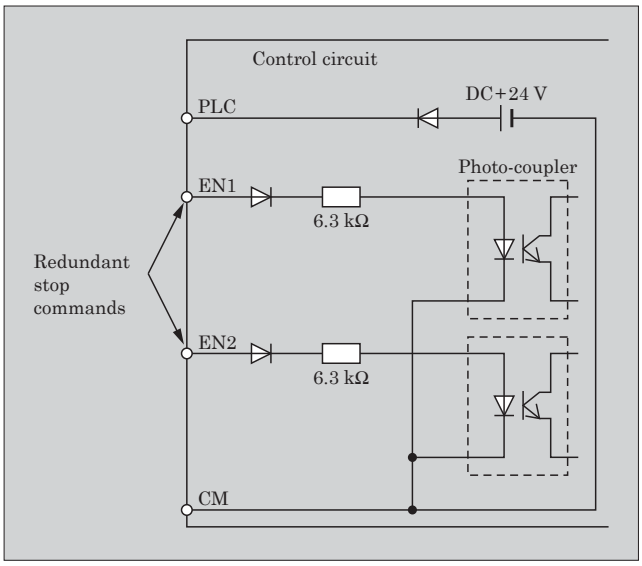

Fig.4 STO input circuit

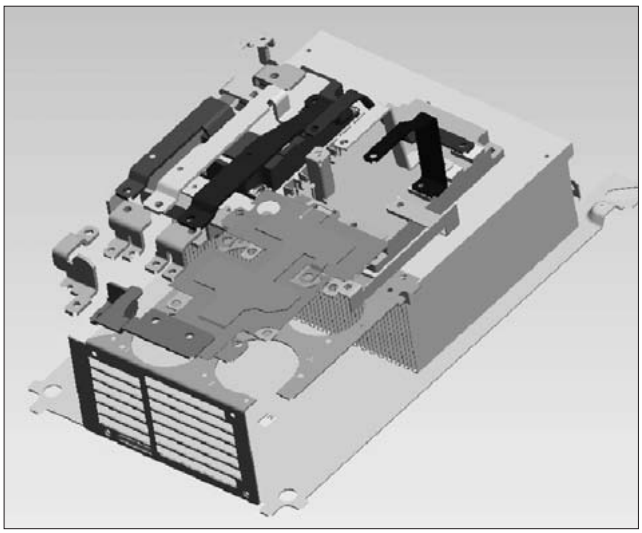

Fig.5 Three dimensional model for EMC analysis

The electrical parameters (coupling capacitance, stray capacitance, stray inductance, etc.) necessary for simulating EMC from 3D CAD data as in Fig. 5 are derived by electromagnetic field analysis, and disturbance voltages can be simulated accurately with circuit networks. Figure 6 shows that with improved simulation accuracy, the analysis results approach the measured results more closely, and this level of accuracy is sufficient for practical applications. Accordingly, EMC countermeasures can be incorporated from the early stages of structural design, leading to a shorter product development time.

In the future, front loading of the design process will continue using simulations.

(3) High-speed synchronous communication technology in high performance drive systems

In fields where high performance drives are utilized, the realization of the functions and performance of the entire system, not merely of the inverter performance, is important. In particular, system control has been implemented in systems in which the controller and bus are coupled, but even further improvements in communication speed and synchronization are needed.

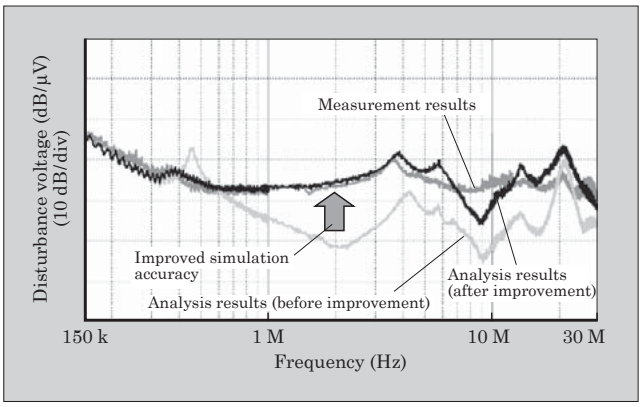

Fig.6 EMC simulation for inverters

Table 2 "E-SX bus" summary specifications

Item	Specification
Communication speed	100 Mbits/s
Synchronization accuracy between axles	±1 μS or less
Distance (distance between stations, total length)	100 m, 1 km
Minimum tact period	0.25 ms

The "FRENIC-VG" high performance vector inverter was designed to be compatible with the "E-SX bus" provided in the "SPH3000MM", Fuji Electric's new CPU module used in the "MICREX-SX Series" of integrated controllers. This bus uses Ethernet technology for high-speed communications, and can be used for multi-axis high-speed control at industrial plants, high accuracy synchronous control driving of printers, and the like. Table 2 summarizes the E-SX bus specifications, and Fig. 7 shows an application example.

In the future, Fuji Electric plans to develop high-speed synchronous communication technology for high performance drives, including motion control.

(4) Silicon carbide (SiC) device technology[2]

The development of power semiconductors is being advanced using new materials such as SiC and gallium nitride (GaN). These materials have the characteristics listed in Table 3, and the development must fully utilize these characteristics.

From these characteristics, various fields of application can be considered, for example, through miniaturizing the reactor in peripheral circuits, reducing noise, and so on.

Moreover, the inverter main circuit uses diode and transistors as shown in Fig. 8, and a hybrid module in which only the diodes have been replaced with SiC devices, and an All-SiC module in which all the diodes and transistors have been replaced with SiC devices are available (see Table 4).

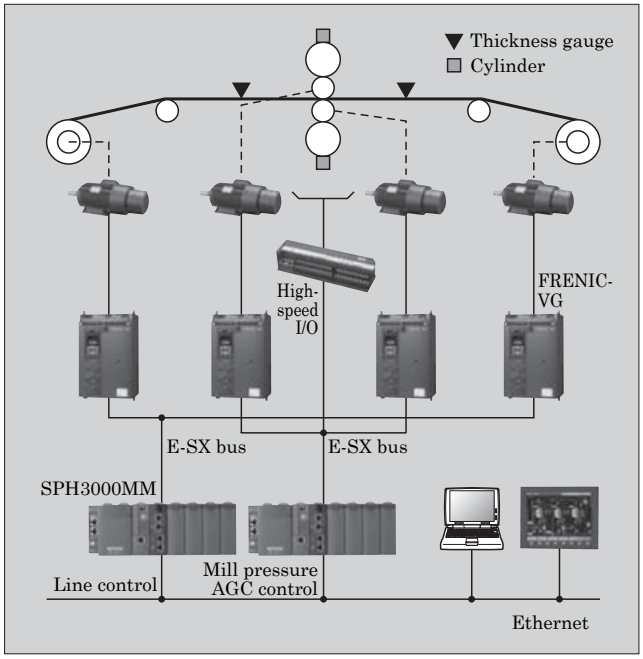

Fig.7 Example of high-speed control system using "E-SX bus"

Table 3 Characteristics of SiC and GaN devices

Characteristic	How to use
Low loss	Increase carrier frequency Reduce loss, increase efficiency
Ability to operate at high temperature	Can be used in higher temperature environment
Easy to increase withstand voltage	Miniaturize high-voltage device

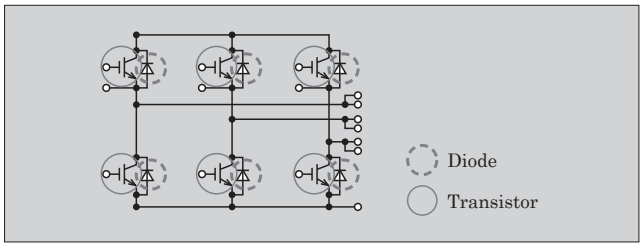

Fig.8 Internal configuration of main inverter circuit

Table 4 Types of modules that use SiC technology

Module type	Diode	Transistor
Hybrid module	SiC	Si
All-SiC module	SiC	SiC

Fuji Electric has developed the "FRENIC-MEGA GX-SiC," a high-efficiency inverter that uses this hybrid module. Compared to previous models, loss can be reduced by 25%, and in combination with a "GNS Series" or "GNP Series" high-efficiency synchronous motor, enables the realization of drive systems with even higher efficiency.

The All-SiC module enables a significant reduction in loss and has demonstrated that not only high efficiency but also small size can be achieved.

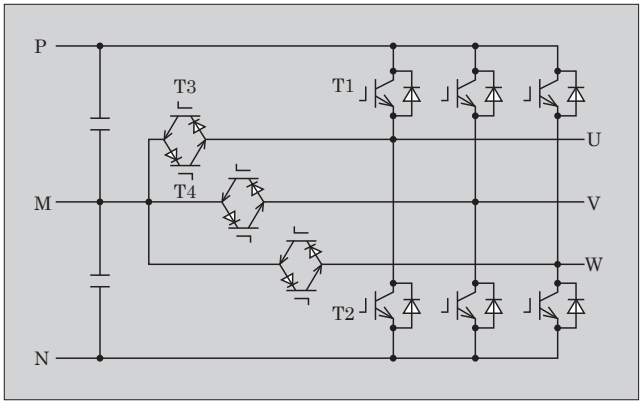

Fig.9 AT-NPC 3-level conversion circuit

(5) AT-NPC 3-level conversion technology[3]

Achieving higher efficiency in an uninterruptible power supply (UPS), a PCS or other conversion equipment is a major challenge. An AT-NPC 3-level conversion circuit as shown in Fig. 9 was developed as a means to realize such higher efficiency. With this circuit, not only is switching loss reduced by half compared to a conventional 2-level conversion circuit, but harmonic voltage is reduced and the loss in filter circuits, including reactors and capacitors, is also reduced, thereby enabling the miniaturization of equipment. The 3-level conversion circuit uses an AT-NPC 3-level IGBT module incorporating an RB-IGBT developed by Fuji Electric, and achieves a further reduction in loss.

(6) Evaluation and application technology for storage batteries

The need for electrical storage, in applications not limited to UPSs, is spreading. On the other hand, lithium ion batteries are being put to practical use in EVs and HEVs as new storage devices that replace the conventional lead-acid batteries. In addition to evaluating the characteristics and service life of various lithium ion batteries, Fuji Electric has also established proprietary technology for evaluating safety and reliability from the perspective of the end user. As a result, the development period and evaluation period for products that use lithium ion batteries can be shortened.

3.2 Current status of product development

(1) Inverters for specific applications

In recent years, low-voltage inverters, known as general-purpose inverters, have tended to become specialized as dedicated inverters for specific applications, i.e., inverters for elevators, inverters for air conditioning, inverters for industrial use, and the like.

The "FRENIC-HVAC/AQUA" inverters for use in air conditioning and water treatment systems target the large markets for heating ventilation and air conditioning (HVAC) and for water treatment.

Additionally, because these inverters support IP55*2, they do not have to be stored inside a panel, thus reducing costs. Also, because they are used in air

conditioning applications in buildings and factories, the inverters have a built-in DC reactor (DCR) for improving the power supply power factor and a built-in EMC filter. Moreover, dedicated functions for fan and pump control have been strengthened so that pressure and temperature can be controlled with the inverter only.

A summary of the specifications are listed in Table 5.

(2) Permanent magnet synchronous motor (PM motor)

A permanent magnet (PM) motor that uses a permanent magnet has the characteristics of higher efficiency, smaller size and lighter weight than an induction motor. To fully leverage these characteristics, the PM motor models shown in Table 6 have been developed.

The "GNS Series" and "GNP Series" of ultra high-efficiency motors are energy-saving motors that are installation-compatible with induction motors, and in terms of efficiency, are 3 to 8.5 percentage points more efficient than induction motors in general. The high-efficiency "GNB" of energy-savings motors is compact and lightweight. The sensor-equipped "GNF" is 1 to 2 frame sizes*3 smaller than an induction motor, and can be used in general industrial machine control applications such as printing equipment to leverage its small size and light weight.

Table 5 "FRENIC-HVAC/AQUA" product specifications

Item	Specifications
Voltage	400 V
Capacity range	0.75 to 710 kW
Protective structure	IP21/55 (90 kW or less) IP00 (110 kW or less)
Built-in DCR	(90 kW or less)
EMC filter	Internal
Functions	Estimated terminal pressure control, pump control, temperature control, FireMode, etc.

Table 6 List of PM motor series

Product type	Rotation sensor	Efficiency	Use
GNS	Sensorless	IE4 or higher	Energy savings, replacement of existing induction motor
GNP		IE4 equivalent	
GNB		IE3 equivalent	Energy savings, small size, light weight
GNF	With sensor	IE3 equivalent	General industrial machine control

*2: IP55: Code indicating the dustproof and waterproof performance stipulated in IEC 60529 and JIS C0920, and corresponding to dustproof and water jet proof models

*3: Frame size: A series of motors often has a common frame size for 2 or 3 different capacities

(3) Power electronics equipment for rail vehicles

For the propulsion systems of Shinkansen trains, Fuji Electric supplies main transformers, main converters, and main motors. The main converters have been improved with each successive generation, and have been made compact, lightweight, blowerless, and so on. Additionally, for auxiliary power supply units, distinctive products that realize high performance and high reliability are being delivered.

For the door system, linear motor and flat cup permanent magnet motor (FCPM) methods exist, and have been used both in Japan and overseas.

(4) Power electronics equipment for electric vehicles

As ground-based quick charger, 44 kW, 39 kW and 25 kW models that support the CHAdeMO*4 specification have been developed and have been introduced to the market.

In particular, a 25 kW model was developed based on server power supply technology for information devices, for which Fuji Electric has a proven track record, allowing for miniaturization and scalability.

(5) High-efficiency power supplies for servers

DC stabilized power supplies for computers and servers are required to be highly efficient and to have a high power density. Comprehensive high-efficiency guidelines are provided that, rather than merely assess the maximum efficiency, also prescribe efficiency in the low load region.

Fuji Electric has applied device application technology, circuit technology and digital control technology to obtain 80 PLUS*5 Platinum certification for its 2.1 kW and 2.5 kW power supplies.

(6) Mini UPS

The market for data centers that provide Web services and the like has been expanding recently, and for the purpose of reducing equipment installation cost and shortening construction and delivery times at these data centers, server rack-mounted products have been increasingly selected instead of electrical equipment with a separate UPS. Moreover, in order to reduce running costs, air conditioning power is being decreased and server room temperature settings are being raised. Meanwhile, in the pursuit of added-value, high density arrangements of servers on racks are increasingly demanded. Longer service life and smaller size are strongly required of UPS installed in such server rooms under high temperature conditions.

Focusing on nickel-metal hydride batteries that can be used even in high ambient temperatures, Fuji Electric has developed the "LX Series" of mini UPS equipped with nickel-metal hydride batteries and housed in a server rack. In particular, this series of mini UPS is suitable for use in container data centers under severe temperature conditions.

*4: CHAdeMO: Trademark or registered trademark of the CHAdeMO Association

*5: 80 PLUS: See "Explanation 1" on page 217

(7) Large capacity UPS

At large-scale data centers that handle public systems and corporate infrastructure systems, because higher reliability and long-term stability are sought, UPSs are positioned as critical devices for electrical equipment. Systems are typically configured with redundancy using multiple 500 kVA class large-capacity UPSs. For these types of UPS for data centers, efficiency and small size are considered to be extremely important and particularly, as in the case of the aforementioned power supplies for servers, efficiency in the low load region attracting attention.

The "HX Series" that uses AT-NPC 3-level conversion technology not only realizes high efficiency and smaller size, but by reducing the no-load loss, which is a characteristic of 3-level conversion, greatly improving efficiency at low loads.

(8) Large capacity PCS

PCS for mega solar plants are required to have high efficiency and low installation costs.

In a PCS inverter unit, AT-NPC 3-level conversion technology is used to realize higher efficiency. Also, an outdoors-type package product that integrates a PCS, transformer and switches has been developed. As a result, the installation cost can be reduced and the construction period can be shortened, enabling a reduction in the total construction cost of a mega solar system.

4. Postscript

This paper has discussed the technical trends and current status of product development for power electronics equipment.

In response to market demands, power electronics equipment have driven innovation in the basic technologies of circuit technology, control systems and power semiconductors. This innovation corresponds to RB-IGBTs and AT-NPC 3-level circuit technology as well as to dedicated modules, DC distribution devices and the like, and SiC devices are expected to continue to be used in the future. Additionally, in the application fields of power electronics equipment, various peripheral technologies have been actively incorporated to meet market demands in each field.

In the future, Fuji Electric intends to contribute to society by further increasing the technical level and expanding the application areas of power electronics equipment.

Reference

(1) MORIAI, H. Interruption Technology of Breakers for High-Voltage Direct Current. FUJI ELECTRIC REVIEW. 2012, vol.58, no.3, p.127-132.

(2) NAKAZAWA, M. et al. Hybrid Si-IGBT and SiC-SBD Modules. FUJI ELECTRIC REVIEW. 2012, vol.58, no.2, p.70-74.

(3) KOMATSU, K. et al. IGBT Module for Advanced NPC Topology. FUJI ELECTRIC REVIEW. 2011, vol.57, no.3, p.72-76.

Fuji Electric

Innovating Energy Technology