“FA1B00 Series” 4th-Generation Critical Conduction Mode, Power Factor Correction Control ICs

ENDO, Yuta* YAGUCHI, Yukihiro* HIASA, Nobuyuki*

ABSTRACT

Fuji Electric has developed the “FA1B00 Series” 4th-generation critical conduction mode, power factor correction control ICs to meet the market demand for power supplies with low power consumption and low cost. We have newly developed an input current trapezoidal wave control method to suppress output voltage ripple while reducing power source harmonic current. This method facilitates the miniaturization of the output capacitor of a PFC circuit. Furthermore, by inheriting the light-load bottom-skip function and standby mode burst function from the previous model, the “FA1B00 Series” helps reduce the power consumption and cost of power supplies.

1. Introduction

The use of switching power supplies has become widespread due to the smaller size and weight of electronic devices such as televisions. Harmonic current in switching power supplies can lead to operational failure, decrease power factor of equipment and distribution facilities, and increase apparent power. Therefore, the international standard IEC 61000-3-2 classifies electrical and electronic devices in classes A to D, as shown in Table 1, and establishes regulatory values with respect to power source harmonic current.

To solve problems related to power source harmonic current and power factor, power filter correction (PFC) circuits using an active filter are often utilized, and it is against this backdrop that Fuji Electric has commercialized ICs for controlling PFC circuits.

In recent years, there has been increasing demand for size and price reduction of electronic devices such as televisions, and this in turn has increased the need for small and low-cost switching power supplies for these products.

In addition, energy savings in electrical products in general has become increasingly important to reduce environmental burdens worldwide. PFC circuits also need to be reduced in standby power and improved in efficiency at light loads.

In response to these demands, Fuji Electric has developed the “FA1B00 Series” 4th-generation critical mode PFC control IC line-up as the successor to the “FA1A00 Series” 3rd-generation critical mode PFC control IC line-up for counteracting harmonic current. The “FA1B00 Series” satisfies power source harmonic current regulations, contributes to miniaturization of the PFC circuit output capacitor and enables highly efficient power control during light loads and standby.

Table 1 Classification of power source harmonic current regulations (IEC 61000-3-2)

Classification	Typical equipment
Class A	Major home appliances, Audio equipment
Class B	Portable power tools, Arc welding machines
Class C	Lighting equipment
Class D	PCs, TVs

2. Overview of the “FA1B00 Series”

Figure 1 shows the external appearance for the recently developed FA1B00 Series, and Table 2 shows a comparison of major features.

The FA1B00 Series has lined up the “FA1B21N” as an IC modified to control the suppression of PFC output voltage ripple on the basis of the “FA1B20N,” which integrates communication and burst functions with the conventional FA1A00 Series to reduce the standby power. By using ceramic capacitors and film capacitors for the output capacitors, volume has been reduced to one-tenth of that of conventional electrolytic capacitors, thereby contributing to smaller size and

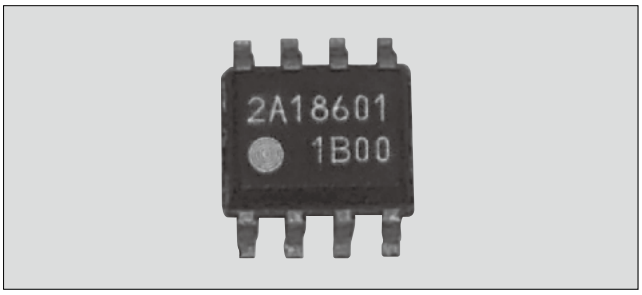

Fig.1 “FA1B00 Series”

* Electronic Devices Business Group, Fuji Electric Co., Ltd.

Table 2 Comparison of main “FA1B00 Series” features

Item	FA1B00N	FA1B20N	FA1B21N
Turn-on timing detection	ZCD winding	Inductor current	Inductor current
Pulse width control	Voltage mode	Voltage mode	Current mode
Light load switching operation	Limiting Max. frequency	Bottom skip	Bottom skip
Communication capability with LLC	No	Yes	Yes
Current detection polarity	Plus	Minus	Minus
PFC output overvoltage protection	Single	Double	Double
Main applications	LED lighting, etc.	General purpose use	Flat screen TVs

longer lifespan of devices. However, this has resulted in decreased capacitor capacitance and therefore has the disadvantage of a greatly deviating input voltage specification for the converter connected to the rear stage of the PFC circuit. In order to compensate for this disadvantage, the IC suppresses output voltage ripple to achieve size reduction and a longer service life for the device.

Furthermore, the “FA1B00N” has been designed for applications that improves power factor at light loads by utilizing a zero current detection (ZCD) winding for inductor current zero-cross detection in order to determine metal-oxide-semiconductor field-effect transistor (MOSFET) turn-on timing. Figure 2 shows the block diagram for the “FA1B21N.”

3. Features

3.1 PFC output capacitor miniaturization

Figure 3 shows the conceptual block diagram for the PFC circuit.

In general, capacitors in this circuit need to have a large capacitance and high withstand voltage to accommodate an output voltage of 400 V (450 V for electrolytic capacitors). However, this has required enlarging a capacitor (C2), which is used for smoothening PFC output voltage, and this in turn has created the problem of a larger footprint in the PFC circuit portion of the power supply board.

When capacitor capacitance is reduced to achieve space and cost savings for the board, PFC output voltage ripple increases during steady-state operation. Moreover, when dynamic conditions such as commercial AC input fluctuation or load fluctuation occur, a high output voltage is generated near a phase compo-

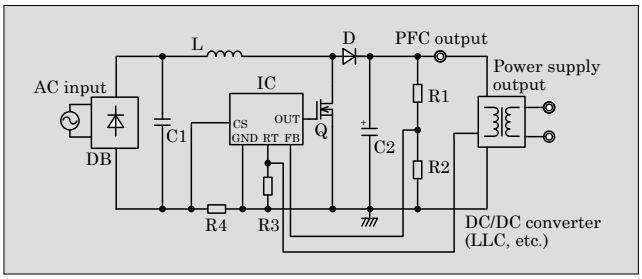

Fig.3 PFC circuit conceptual block diagram

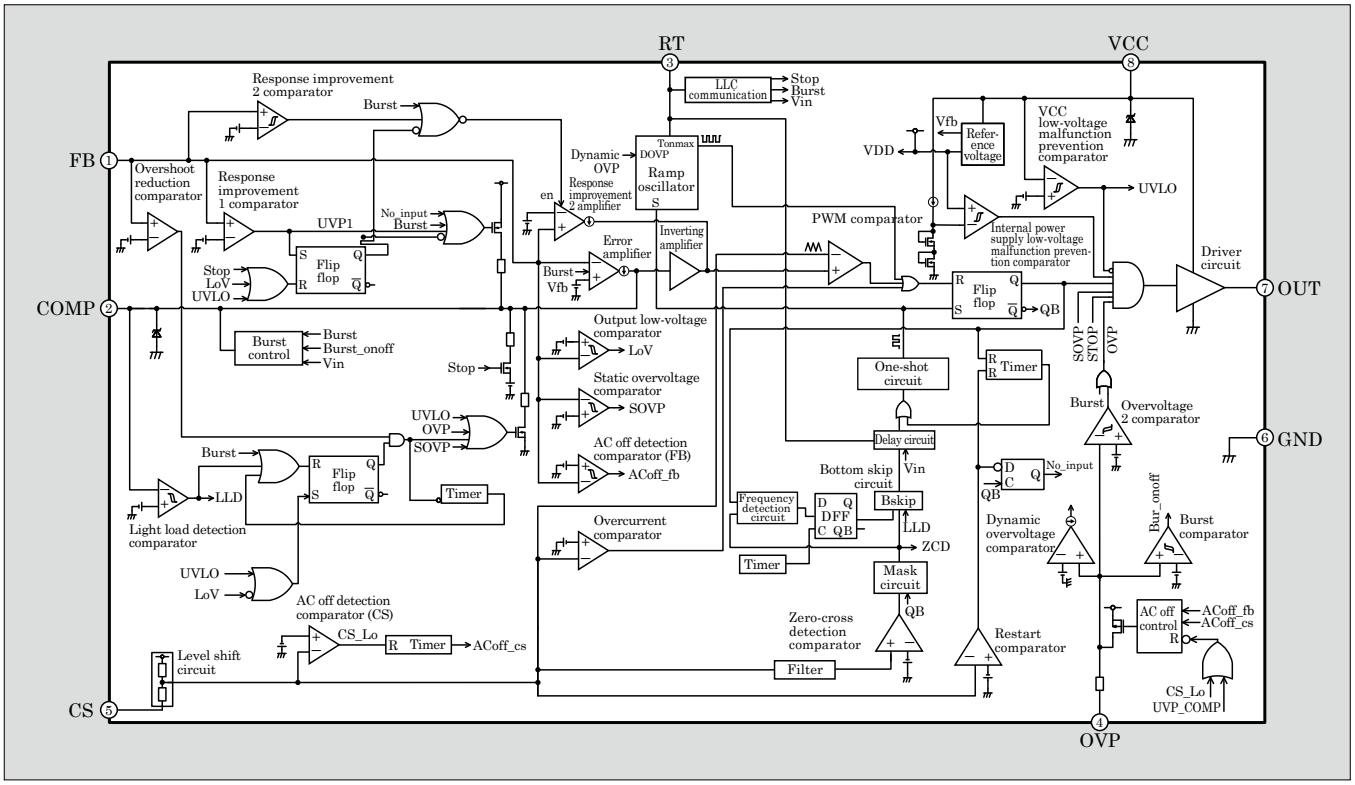

Fig.2 “FA1B21N” block diagram

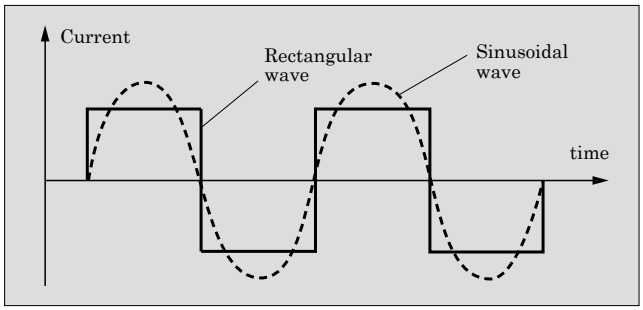

Fig.4 Schematic diagram of input current waveform

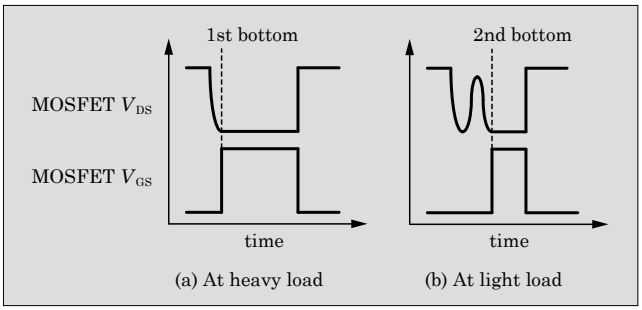

Fig.5 Bottom skip operation

nent of 90 degrees in response to the input voltage, and this can lead to power element or electrolytic capacitor breakdown due to the overvoltage. On the other hand, near 0 degrees, a large output voltage drop below the minimum input voltage of the DC/DC converter connected to the rear stage of the PFC circuit may occur, thereby potentially leading to power supply operation stoppage or system reset for the equipment.

Therefore, we newly developed and applied an input current trapezoidal wave control method as a new control method that both suppresses output voltage ripple and reduces power source harmonic current.

Equation 1 shows the theoretical equation of output voltage ripple for the conventional method using a sinusoidal input current, Equation 2 shows that for the new method using an input current approximated to a rectangular wave, and Fig. 4 shows the waveform schematic diagram.

$$\Delta V_{PP0} = \frac{P_o}{2\pi f_{ac} V_o C} \quad \cdots (1)$$

$$\Delta V_{PP1} = \left(\sqrt{\pi^2 - 4} + 2\arcsin\left(\frac{2}{\pi}\right) - \pi\right)\Delta V_{PP0}$$

$$= 0.661\Delta V_{PP0} \quad \cdots (2)$$

ΔV_{PP}: Output voltage ripple (peak to peak)
P_o: Output power
f_{ac}: AC input frequency
V_o: Output voltage
C: PFC output capacitor capacitance

It can be seen from Equation 1 and Equation 2 that the output voltage ripple of the rectangular wave decreases to 66.1% with respect to that of the sinusoidal wave. In this respect, it is expected that the new trapezoidal waveform control method will be able to reduce output voltage ripple in the same manner as rectangular waves while also achieving lower power source harmonic current than rectangular waves.

3.2 High efficiency at light loads (bottom skip function)

Switching frequency increases at light loads in critical current operation PFC circuits that turn on the MOSFET after the inductor current becomes zero. As a result, MOSFET switching loss increases, resulting in the problem of degraded efficiency.

The conventional 3rd-generation FA1A00 Series incorporated a bottom skip function to improve efficiency at light loads[1]. The FA1B20N and FA1B21N of the 4th-generation FA1B00 Series also make use of this function.

Figure 5 shows the switching operation of heavy loads (no bottom-skip operation) and light loads (with bottom-skip operation).

When bottom-skip operation is not performed, the mechanism for increasing operation frequency at light loads is as follows:

(a) Load is lightened.
(b) IC transitions to control the shortening of the MOSFET ON period.
(c) Since the ON period is short, the OFF period until the first bottom occurs in the MOSFET V_{DS} is also shortened after entering the OFF state.
(d) Frequency increases because both the ON period and OFF period become shorter.

On the other hand, when bottom-skip operation is performed, the mechanism for suppressing operation frequency at light loads is as follows:

(a) Load is lightened.
(b) IC transitions to control the shortening of the MOSFET ON period.
(c) Since the ON period is short, the OFF period until the first bottom occurs in the MOSFET V_{DS} is also shortened after entering the OFF state. When the sum of the ON period and the OFF period is less than a certain constant, the bottom skip function delays the turn ON timing of the MOSFET from the first bottom to the second bottom.
(d) The OFF period is longer than when the function is not implemented, therefore, the frequency increase is suppressed.

By suppressing the increase in frequency, switching loss is reduced, and this improves efficiency at light loads. In addition, the MOSFET will generate less heat, and this can contribute to power supply cost reduction because the size of the heat sink for dissipating heat can be reduced.

3.3 High efficiency in standby mode (burst function)

In standby mode in which the load is lighter than normal light loads, PFC circuit switching loss occupies a large percentage of total loss. Therefore, the

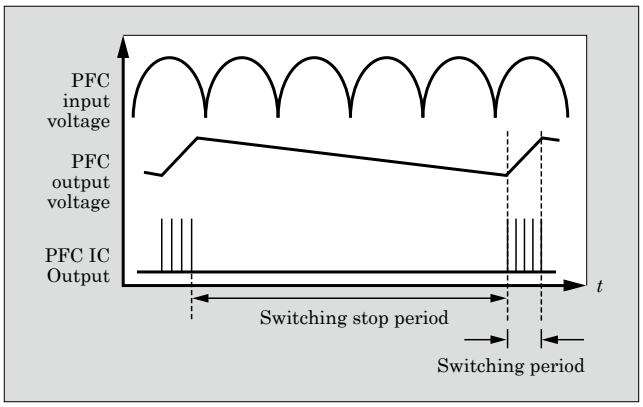

Fig.6 Burst operation

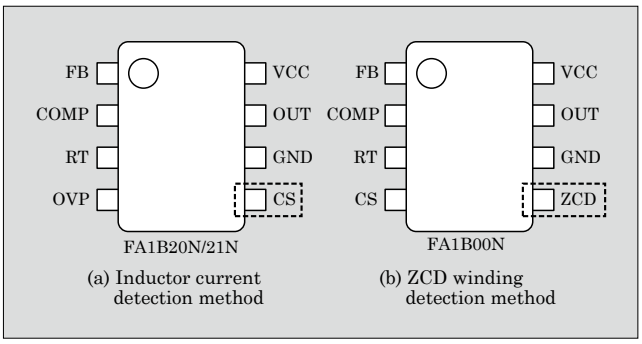

Fig.7 Terminal arrangement corresponding to 2 detection methods

power supplied to the PFC control IC is generally cut off and switching is stopped to reduce standby power. However, PFC output voltage becomes largely dependent on the input voltage. As a result, the standby efficiency of the rear stage LLC converter deteriorates. Furthermore, external circuit components are required to cut off the power supply, which increases the space and cost of the power supply board.

In order to solve this problem, Fuji Electric has developed and produces the "FA1A60N" as a product that uses a function (burst function) to improve efficiency while maintaining the operation of the PFC control IC in standby mode. The FA1A60N identifies the standby mode by means of the communication signal input in the RT terminal from the LLC converter control IC FA6B20N[(2)].

In the FA1B00 Series, the polarity of the signal input of the communication function is changed to reduce the number of external components required for the communication function.

During light or heavy loads, error amplification is performed inside the IC on the basis of the voltage of the dividing resistors (R1, R2) responsible for monitoring the output voltage input to the FB terminal as shown in Fig. 3, with the output pulse width of the OUT terminal controlled to maintain PFC output voltage at a constant value.

In standby mode, the burst function is used to stop switching when the output voltage exceeds a certain range and restart switching when it falls below a certain range as shown in Fig. 6. This control mechanism improves efficiency in standby mode.

3.4 Two turn-on timing detection methods

In order to correspond to 2 methods for detecting the turn-on timing of the MOSFET, the FA1B00 Series employs an inductor current detection method for FA1B20N and FA1B21N and a ZCD winding detection method for FA1B00N, as shown in Fig. 7.

4. Effect of Application on Power Supplies

Figure 8 shows an evaluation-use application circuit (inductor current detection method) equipped with an FA1B00 Series product.

Figure 9 shows the power supply operation waveforms for the different control methods. Figure 9(a) shows the waveform at the implementation of the new control method (input current: trapezoidal wave) using an FA1B21N and output capacitor with a rating of 15 μF, which is approximately one-tenth of that of the conventional method. Figure 9(a) shows the waveform at the implementation of the conventional control method (input current: sinusoidal wave) using an FA1A20N and output capacitor with a rating of 165 μF. In the FA1B21N, we confirmed that changing the control method to the input current trapezoidal wave control method was able to deliver the same level of stable operation as the conventional method with no switching operation instability or input current disturbance. The measurements for the evaluation results described below were conditioned upon an input voltage of 100 V AC and load power of 200 W.

Furthermore, as shown in Fig. 10, we confirmed that the output voltage ripple in the new method was 70% of that of the conventional method over the entire input voltage range. In addition, the basic characteristics shown in Table 3 did not differ with respect to efficiency or power factor, and the power source harmonic current characteristic shown in Fig. 11 was also satisfactory, securing a margin of 30% or more with respect to the Class D regulation values. This shows that the input current trapezoidal waveform control method is an effective means of size reduction of PFC output capacitors.

For example, if power supply specifications are satisfied even at a ripple voltage of 1.4 times that of the conventional method, the capacitance of the output capacitor will be halved, thereby enabling space and cost savings for the power supply board.

Moreover, with respect to the bottom-skip function and burst function inherited from previous models, we confirmed light load efficiency and the standby power

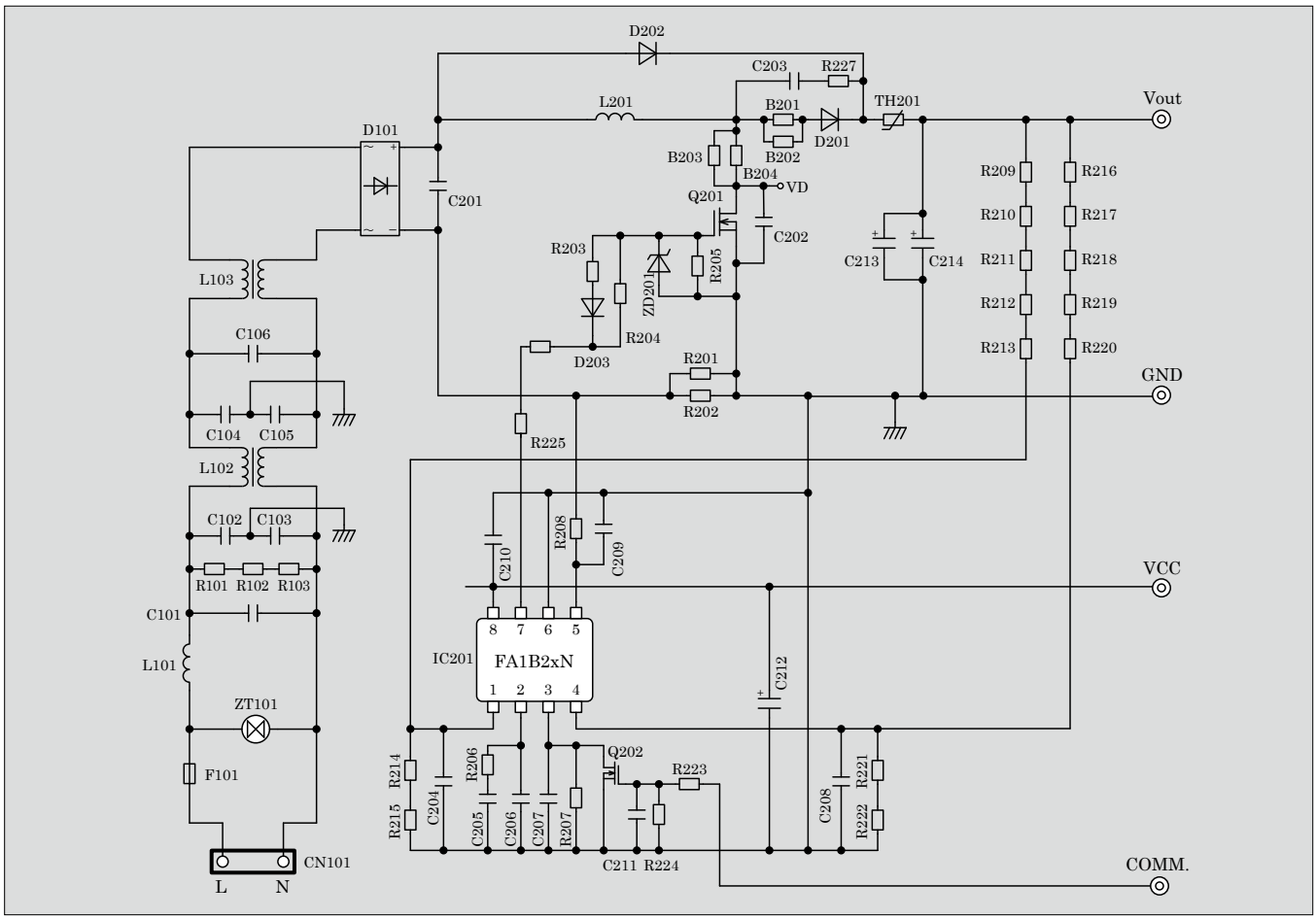

Fig.8 Evaluation-use application circuit (input: 90 to 264 V AC; output: 400 V/200 W)

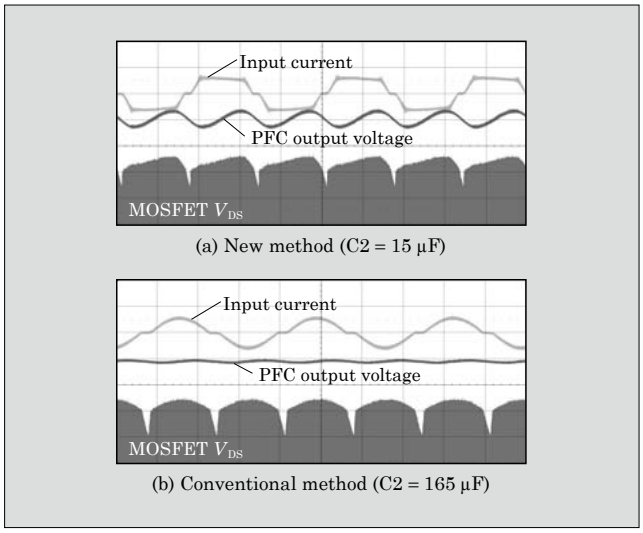

Fig.9 Input current waveforms during power supply operation

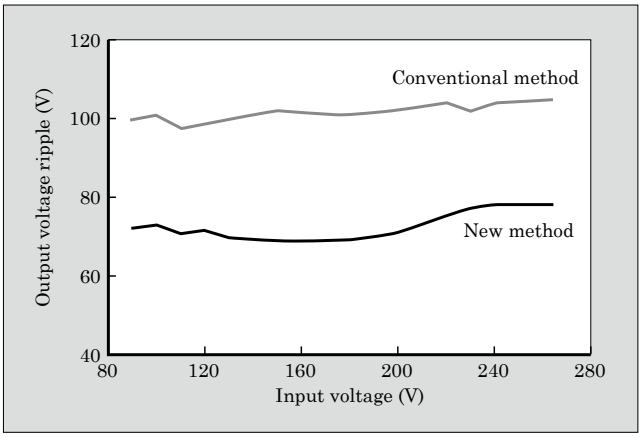

Fig.10 Comparison of output voltage ripple (C2 = 15 μF)

Table 3 Comparison of basic characteristics for control methods

Method	Efficiency (%)		Power factor (–)	
	100 V AC	230 V AC	100 V AC	230 V AC
New method	86.6	90.3	0.978	0.940
Conventional method	86.6	89.6	0.986	0.940

characteristic using a power supply equipped with a FA1B20N and verified that high-efficiency characteristics were the same as previous models. Figure 12 shows the standby power characteristic.

Please note that these power supply characteristics are the result of applying the FA1B20N, which uses inductor current to detect turn-on timing. We have also confirmed adequate power supply characteristics for the FA1B00N, which uses a ZCD winding to make detection.

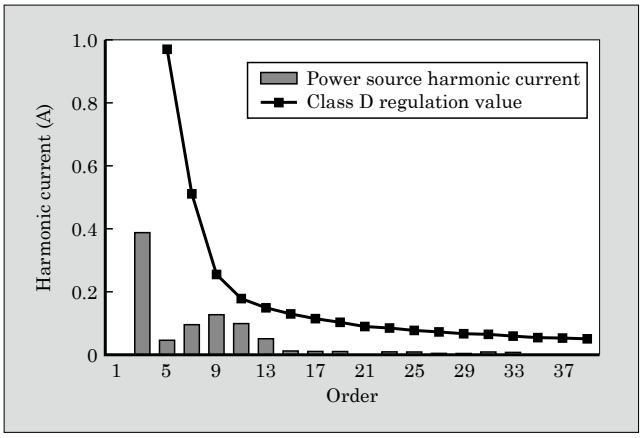

Fig.11 Power source harmonic current characteristic (C2 = 15 μF)

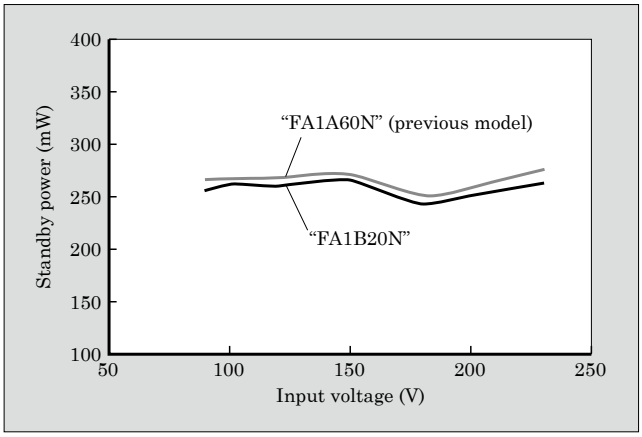

Fig.12 Standby power characteristic (load: 125 mW)

The FA1B20N and FA1B21N are suitable for power supplies that are required to improve efficiency at light loads or lower the cost by the reduction of the amount of auxiliary windings responsible for detecting inductor current. The FA1B00N is suitable for a power supplies that are required to improve power factor at light loads or further reduce the switching loss of power elements by detecting turn-on timing with high precision with a inductor auxiliary winding. In this way, adequate product can be selected according to the detection method of the turn-on timing.

5. Postscript

In this paper, we described the "FA1B00 Series" 4th-generation critical mode PFC control ICs. Critical mode PFC control ICs are required to achieve high power factor and high efficiency power supply characteristics, while facilitating cost reductions.

In the future, we plan to continue developing product series equipped with features that meet the various requirements of the market, as well as products that further optimize control and functionality.

References

(1) Sugawara, T. et al. 3rd-Gen. Critical Mode PFC Control IC "FA1 A00 Series". FUJI ELECTRIC REVIEW. 2014, vol.60, no.4, p.233-237.

(2) Sonobe, K. et al. Critical Mode PFC Control IC "FA1 A60N" and LLC Current Resonant Control IC "FA6B20N" for High-Efficiency Power Supplies. FUJI ELECTRIC REVIEW. 2016, vol.62, no.4, p.269-274.

Fuji Electric

Innovating Energy Technology